linear motion & power transmission design guide

PJLMPTDG - 02

POWER JACKS

Section Index

Picture Index

Cubic Actuators

Metric Actuators

Metric Ball Screw Actuators

Stainless Steel Actuators

EMA Actuators

Ball Screw Rolaram Actuator

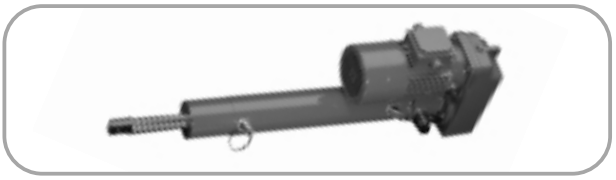

Roller Screw Rolaram Actuator

Special Actuators

Imperial Actuators

Imperial Ball Screw Actuators

Roller Screw and Special Actuators

Spiracon Roller Screw

P-Range Bevel Gearboxes

N-Range Bevel Gearboxes

BA-Range Bevel Gearboxes

Electric Motors

Couplings and Drive Shafts

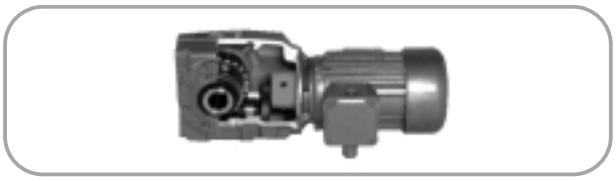

Helical Worm Gearboxes

In-Line Helical Gearboxes

Proximity and Contact Limit Switches

Rotary Limit Switches

Encoders

Position Indicators

Engineers Reference

Company Profile

Power Jacks is the largest and most experienced manufacturer of actuators and mechanical jacks in the UK. With our range of Power Jacks and Duff-Norton actuators you don't just get the product, you also get the knowledge and experience from a company that has, since 1883, manufactured quality industrial lifting, positioning and materials handling equipment.

On our extensive site in Fraserburgh, Aberdeenshire, we have a wide range of engineering facilities including CAD/CAM/CAE technology to aid engineering design and manufacture, an advanced production control system ensuring the optimum product flow through our comprehensive range of conventional and CNC machining facilities, which maximises efficiency and reduces delivery times. This is achieved with our 100+ highly trained employees, giving Power Jacks the capability to produce mechanical engineering of the highest standards.

Quality is a key part of Power Jacks working philosophy and built into the product from initial design conception, through production, to installation and after sales service.

There are over two million of our actuators successfully in operation world-wide. The Power Jacks Group are a global market leader in Linear Actuation Systems.

Power Jacks Ltd Extensive Site in Fraserburgh, Aberdeenshire

By specifying a Power Jacks product you are assured of quality, reliability, performance and value. In the United Kingdom there are a team of highly experienced sales engineers to assist customers with their actuation applications whether on site or by direct communications with the Fraserburgh factory. For overseas customers there is an extensive distributor network world-wide.

Power Jacks Standard Product Range Covers:-

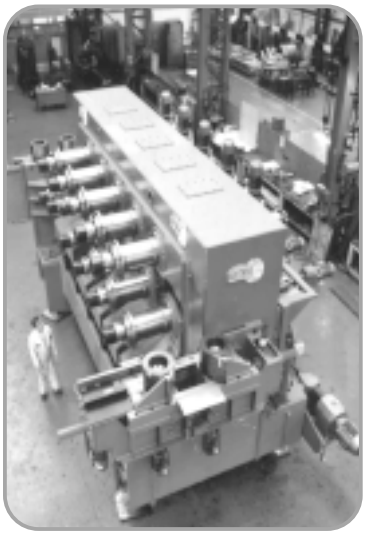

Machine Screw Worm Gear Actuators (Screw Jacks)

Ball Screw Actuators (Screw Jacks)

Stainless Steel Actuators (Screw Jacks)

Micro-Miniature Actuators

TracMaster Electro-Mechanical Linear Actuators

EMA Electro-Mechanical Linear Actuators

Rolaram Electro-Mechanical Linear Actuators

Mechanical Jacks

Neeter Drive Bevel Gear Boxes

Reduction Gear Boxes

Power Transmissions

Accessories for Complete Actuator Systems

Actuator Motion Control Systems

Track (Rail) Jacks

Hydraulic Jacks

Hydraulic Cylinders

Hydraulic Pumps and Tools

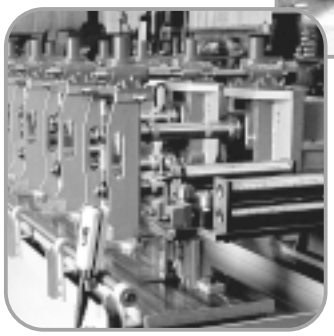

Both Metric and Imperial Products are available.

As well as these standard products Power Jacks has a dedicated engineering team for the design of "Special" products to suit all customer requirements.

These products can be provided as individual parts or single or multiple systems with full engineering consultancy available as part of the service.

For more information contact:

Power Jacks Ltd
South Harbour Road Fraserburgh AB43 9BZ
Tel: +44 (0) 1346 513131
Fax: +44 (0) 1346 516827
email: sales@powerjacks.com
Internet: http://www.powerjacks.com

Company Profile

The Power Jacks Group is an engineering group focused on providing customers with the best solution for precision linear actuation, power transmission, mechanical jacking, hydraulic jacking and engineering service. The engineering history of the group dates from 1883 and the products and service are supplied to customers world-wide.

The Power Jacks Group Brings Together

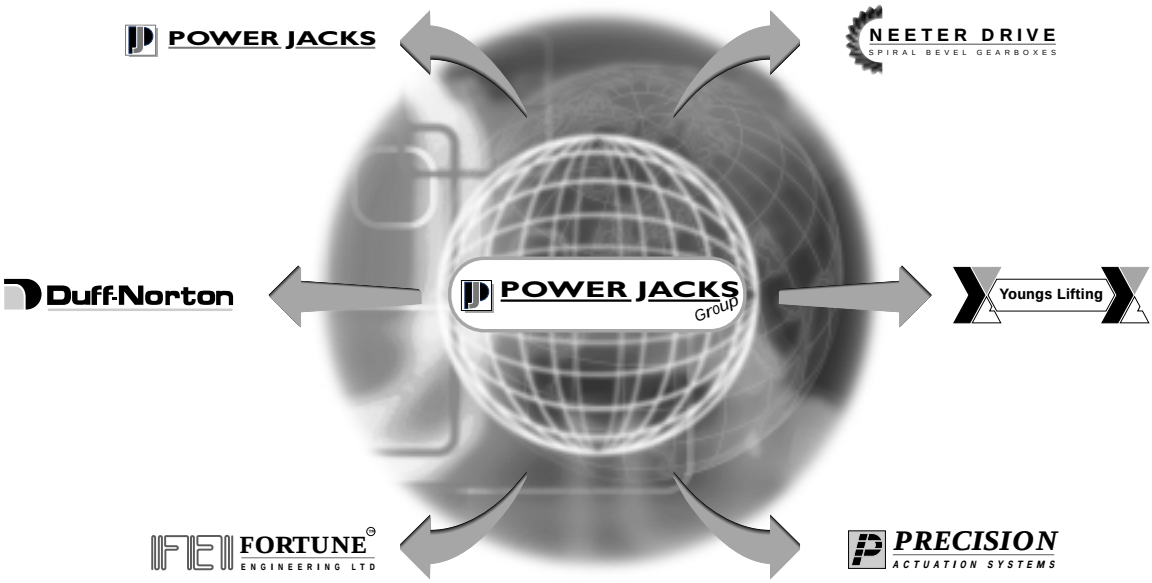

Representation

POWER JACKS Group
manufacturers of precision screw jacks, actuators and gearboxes

Section 1.1. Screw Jack Idea and Application Guide

Screw Jack (Mechanical Actuator) Product Summary
Typical Applications and Accessories
Selecting an actuator
Product Codes

Section 1.2.1

Sym-metric (Cubic) Actuators
S-Series

Sym-metric (CUBIC) Actuators
25kN to 200kN capacities with Machine Screw
Translating and Rotating screw
3 gear ratios and 2 screw leads as standard
Anti-backlash & Anti-rotation (keyed) options

Section 1.2.2. and 1.3.1.

Metric Single Face Screw Jacks (Mechanical Actuators)
E-Series

Metric Single Face Screw Jacks (mechanical actuators)
5kN to 1000kN capacities with Machine Screw or Ball Screw
Translating and Rotating Screw in Upright and Inverted types
2 gear ratios and 1 screw lead as standard
Ball screw units have 2 screw lead options
Anti-backlash and Anti-rotation (keyed) options
6 mounting options including trunnion and double clevis

Section 1.2.3. and 1.3.2

Imperial Single Face Screw Jacks (Mechanical Actuators)
M-Series

Imperial Single Face Screw Jacks (mechanical actuators)
1/2 Ton to100 Ton capacities with Machine Screw or Ball Screw
Translating and Rotating Screw in Upright and Inverted types
2 gear ratios and 1 screw lead as standard
Ball screw units have 2 screw lead options
Anti-backlash and Anti-rotation (keyed) options
5 mounting options including double clevis

1. screw **jacks** (mechanical actuators)

Section 1.2.4. & 1.2.5.

Stainless Steel (E) Metric and (M) Imperial (Single Face) Actuators

Metric 10kN to 1000kN capacities with Machine Screw
Imperial 2 Ton to 100 Ton capacities with Machine Screw
Translating and Rotating Screw in Upright and Inverted types
2 gear ratios and 1 screw lead as standard
Anti-backlash and Anti-rotation (keyed) options
5 mounting options including double clevis

Section 1.2.6.

Micro-Miniature Actuators

Metric or Imperial
Up to 450kg capacities with Machine Screw
Balanced or continuous dial types

Section 1.4.

High Duty and Special Screw Jacks

Roller Screw & Special Actuators
Roller Screw Jacks for high duty applications
Modified screw jacks e.g. material, paint, screw lead, etc..
Special additional features e.g. wear indicator, safety nuts, etc..
New design tailored to exact customer requirements

Section 1.5.

Engineering Guide

Screw Jack (Mechanical Actuator) Engineering Guide
Actuator performance charts
Actuator product operation features
Installation and maintenance tips

Contents

1.1. Idea and Application Guide

1.1.1. Screw Jack (Mechanical Actuator) Product Summary

Sym-metric Machine Screw Actuator

Sym-metric Machine Screw Actuators
Cubic style metric actuator designed and manufactured in the UK. This actuator was designed with a higher thermal efficiency than conventional machine screw actuators, allowing higher duties and working temperatures, and improved mounting arrangements e.g. Upright and inverted positions are now incorporated in one model.

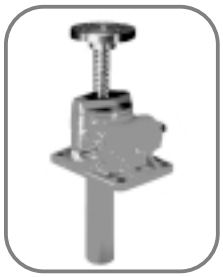

Conventional Machine Screw Actuators

Conventional Machine Screw Actuators
Probably the most widely used mechanical actuator for intermittent duty cycles as the actuator incorporates a precision worm gear set in a rugged casting delivering positive, precise actuation. Available in a comprehensive range including metric models, imperial models in standard materials or stainless steel models for special environments.

Ball Screw Actuators

Ball Screw Actuators
The ball screw actuator can run at higher duties and speeds than machine screw actuators through the high efficiency of the ball screw and nut. The ball screw also provides longer life at load and requires less power than a machine screw actuator for a specified thrust. The range is available with the same number of metric and imperial variants as the machine screw range. All metric models have a ball nut safety device as standard. A high duty cycle model for continuous operation is also available.

Miniature Actuators

Miniature Actuators
Designed for applications which call for extremely precise very small adjustments. To achieve their high accuracy they are equipped with anti-backlash nuts as standard to minimise vertical backlash between the lifting screw and worm gear nut. These actuators are available with a corrosion resistant finish or in stainless steel for harsh environments.

Special Actuators

Special Actuators
Power Jacks design and manufacture special actuators to suit specific customer applications whether this requires modification or addition to a standard product or the design of a completely new actuator.

Actuator Accessories

Actuators Accessories
Power Jacks have a comprehensive range of actuator accessories including power transmissions and motion control systems. A turn key actuation solution can therefore be provided to the customer whether it be for singular or multiple actuator systems.

1.1.2. Typical Applications

Power Jacks actuators operating successfully world-wide in a wide variety of industries including paper, food processing, nuclear, steel, transport, aerospace, communications and leisure.

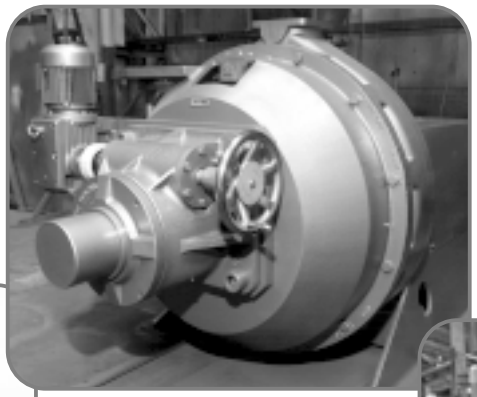

Adjuster to Paper Machine

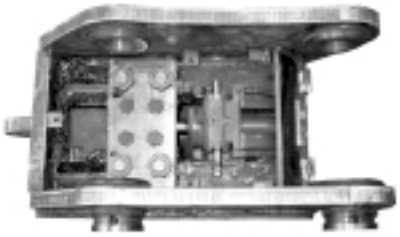

Quick Hitch for Excavator Bucket Attachment

Satellite Dish Positioning

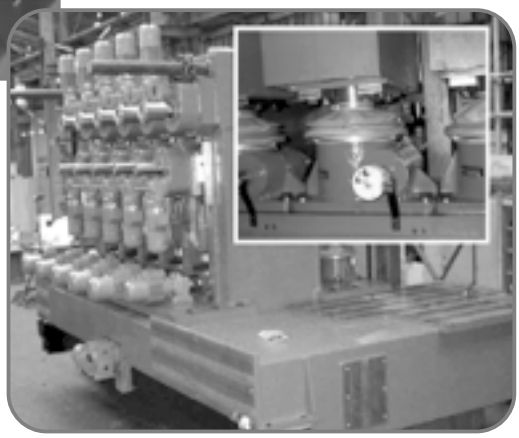

Steel Strip Tension Leveler

Roll Tensioner

12 Head Horizontal Band Saw

Stadium Access Lift

Plate Leveller

Particle Accelerator

Biscuit Making Machine

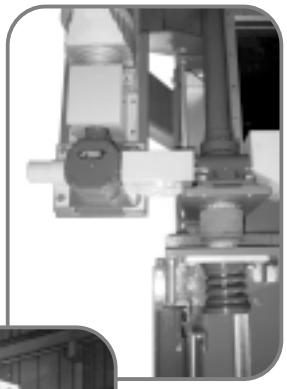

Screw Jack with Coil Spring Damper Unit

Headbox Adjustment on Paper Machine

Glass Packaging Machine

Pre-Feed and Stacking on Fibre Board Machine

Military Aircraft Assembly Locating Rig

Aircraft Airbridge Access Leveling

Sheet Metal Bundle
Turnover Machine

Tube End
Deburring Machine

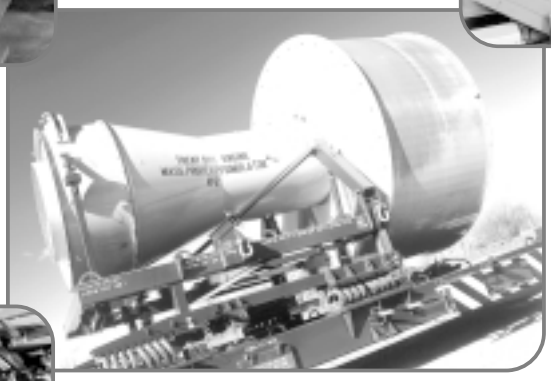

Aero Engine Lift for
Transportation Stand

Foam Forming Machine

Railway
Carriage Lift

Raise and Lower Dampers
in Power Station Flues

Hydospace Test Centre
35 Te Pressure Vessel Lid Lift

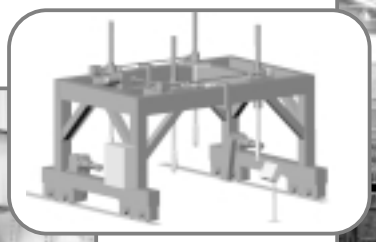

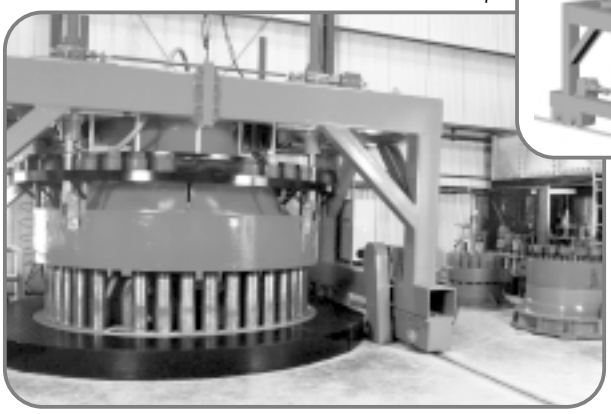

The applications are wide, varied and ever increasing as pneumatic and hydraulic technologies are replaced by what can be a cleaner, quieter and more reliable solution.

Aircraft Access Equipment

Section Rolling Machine

Access Platform Lift for Aircraft Wing Manufacture

Printing Press

Strip Guide Adjusters

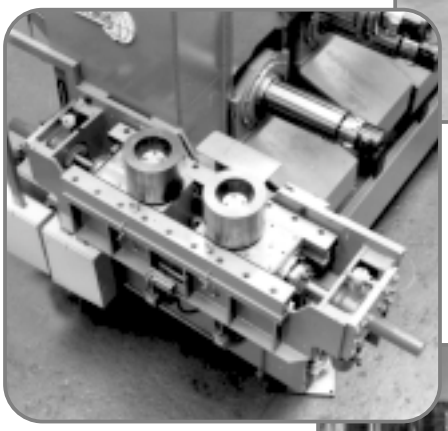

Medical Examination Table

Heavy Duty Straightening Machine

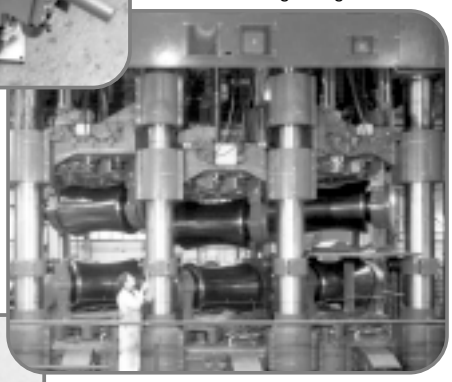

Double Pinch Bending Rolls Machine

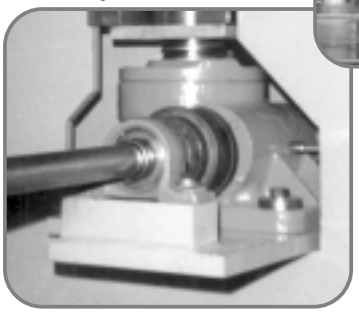

Actuators with Shock Absorbers

1.1.3. Selecting an Actuator

The following selection procedure is applicable for machine screw and ball screw actuators.

1.1.3.1. Five Step Guide to Initial Actuator Selection

Calculate Power and Torque Requirements

Select an actuator from the tables with adequate load carrying capacity and note the actuator static and dynamic efficiency for required input speed.

Step1 Actuator Input Speed

$$N\ (rpm) = \frac{\text{Raise Rate (mm/min)} * \text{Gear Ratio}}{\text{Pitch (mm)} * \text{N° of Starts on Lifting Screw}}$$

Note *Actuator Input Speed should not exceed 1800 rpm.*

Step 2 Operating Input Power (kW), P_{in}

$$P_{in}\ (kW) = \frac{\text{Load (kN)} * \text{Raise Rate (mm/min)}}{60000 * \eta_{ad}}$$

η_{ad} = *Dynamic Actuator Efficiency*

Step 3 Operating Input Torque

$$T_{ino}\ (Nm) = \frac{P_{in}\ (kW) * 9550}{N\ (rpm)}$$

Step 4 Actuator Start-Up Torque

$$T_{ins} = \frac{\text{Load (kN)} * \text{Pitch (mm)} * \text{N° of Starts on Lifting Screw}}{2 * \pi * \eta_{as} * \text{Gear Ratio}}$$

η_{as} = *Static Actuator Efficiency*

Step 5 Mechanical Power and Torque Check

Check whether the actuator power and torque required for the application is not greater than the maximum allowable mechanical input power ($P_{mechanical}$) and Start-Up Torque at Full Load (T_s) values specified in the actuator performance tables.

If $P_{mechanical} > P_{in}$ & $T_s > T_{ins}$ then the actuator selected is acceptable for power requirements.

Example Initial Actuator Selection

Application Contraints

- Load on Actuator = 15 kN in Tension
- Raise Rate required = 100 mm/min

Consider all application constraints then choose an actuator that looks suitable for the application with an actuator load rating equal to or greater than the maximum working load. For this example say a 25 kN Sym-metric Actuator (refer 1.2.1.) with translating screw, 6:1 gear ratio, single start lifting screw (6 mm lead).

Calculate Power and Torque Requirements

Step1 Actuator Input Speed

$$N\ (rpm) = \frac{100\ (mm/min) * 6\ (Gear\ Ratio)}{6\ (mm) * 1\ (N^{o}\ of\ Starts\ on\ Lifting\ Screw)}$$

$N = 100\ rpm$

Note *Actuator Input Speed should not exceed 1800 rpm.*

From the Sym-metric performance tables (refer 1.2.1.1.) dynamic actuator efficiency = 0.275.
(Efficiency value found by interpolating between efficiency values at input speeds higher and lower than desired input speed).

Step 2 Operating Input Power (kW), P_{in}

$$P_{in}(kW) = \frac{15\ (kN) * 100\ (mm/min)}{60000 * 0.275}$$

$P_{in} = 0.091\ kW$

Step 3 Operating Input Torque

$$T_{ino}(Nm) = \frac{0.091(kW) * 9550}{100\ (rpm)}$$

$T_{ino} = 8.7\ Nm$

Step 4 Actuator Start-Up Torque

$$T_{ins} = \frac{15\ (kN) * 6\ (mm) * 1\ (N^{o}\ of\ Starts\ on\ Lifting\ Screws)}{2 * \pi * 0.208 * 6\ (Gear\ Ratio)}$$

$T_{ins} = 11.5\ Nm$

$\eta_{as} = 0.208$ *(refer 1.2.1.1.)*

Step 5 Mechanical Power and Torque Check

Find the actuators mechanical power and torque rating from the performance data tables (refer 1.2.1.1.)

$$P_{mechanical} = 1.5\ kW > P_{in}\ and\ T_s = 19\ Nm > T_{ins}$$

Therefore the actuator selected is suitable for application for initial constraints tested, further analysis may be required to ensure the actuator is suitable for all application conditions (refer 1.1.3.1. or consult Power Jacks Ltd.)

1.1.3.2. Actuator Constraints for Detailed Selection

1.1.3.2.1. Lifting Screw Buckling Criteria

For compressive loads on the actuator lifting screw column strength calculations are required to check for buckling. As an actuator selection guide use the following process:

1. Determine the maximum column length (L) for the actuator being considered (refer 1.5.1.1.).
2. Referring to the relevant column buckling chart (refer 1.5.1.1.) determine the permissible compressive load (Wp) corresponding to the column length (L) for the appropriate end constraints. This permissible compressive load is the maximum load (inclusive of shock loads) which may be applied to the actuator for a given column length.
3. Where an application involves human cargo or there is a risk to personnel, it is highly recommended that the permissible compressive load (as calculated above) be factored by 0.7 to enhance working safety. (Equivalent to a column strength safety factor of 5).

$W_{phc} = W_p * 0.7$ (Permissable compressive load for personnel risk applications)

Note *1. For Ball Screw Actuators Refer 1.5.1.1.2.*
2. For detailed analysis of actuators and their systems (not all covered in this guide) consult Power Jacks.
3. Safety factor of 3.5 for column strength's used for normal industrial cargo.

1.1.3.2.2. Lifting Screw Critical Speed

To calculate the critical speed for rotating screw actuators:

1. Refer to the appropriate critical speed chart in section 1.5.1.2., 1.5.1.3., and 1.5.1.4.
2. Select the correction factor F_{cs} corresponding to the end support conditions for the application.
3. From the critical speed chart select the critical speed corresponding to the unsupported screw length (m) and the actuator load rating (kN).
4. Calculate the limiting critical speed with the formula below.

Limiting Critical Speed = Critical screw speed * F_{cs}

Note *Critical for speeds drive shafts refer 6.2.1.*

1.1.3.2.3. Lifting Screw Deflection

The lifting screw of an actuator mounted horizontally will deflect under its own weight to some extent. The amount of deflection tolerable (y_T) should be less than 0.5 mm per metre.

Deflection Factors, F_{sd}

Fixed/Fixed. F_{sd} = 8

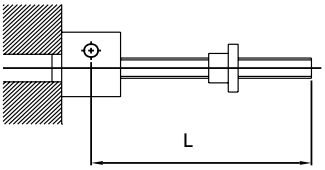

Fixed/Fixed. F_{sd} = 186

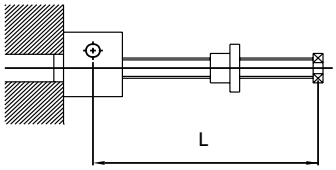

Fixed/Fixed. F_{sd} = 384

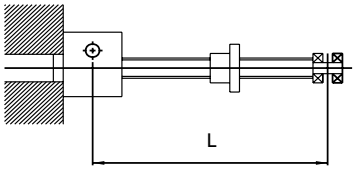

Deflection, y, (mm) = $\dfrac{6 * 10^{-9} * L^4}{F_{sd}\ (d-p)^2}$

Deflection Tolerable, y_T, (mm) = $\dfrac{0.5 * L}{1000}$

L = Lifting Screw Length (mm)
d = Diameter of Lifting Screw (mm)
p = Pitch of Lifting Screw (mm)

If $y < y_T$ then the lifting screw deflection is acceptable.

Note *This is only a deflection guide.*
For detailed analysis, including methods to reduce deflections consult Power Jacks Ltd .

1.1.3.2.4. Actuator Torque

Start up/Static torque values are listed in all performance tables. Whereas dynamic torque values are either calculated using the tabulated dynamic efficiencies or taken direct from torque tables where listed. For detailed actuators analysis consult Power Jacks Ltd.

1.1.3.2.5. Actuator Side Loads

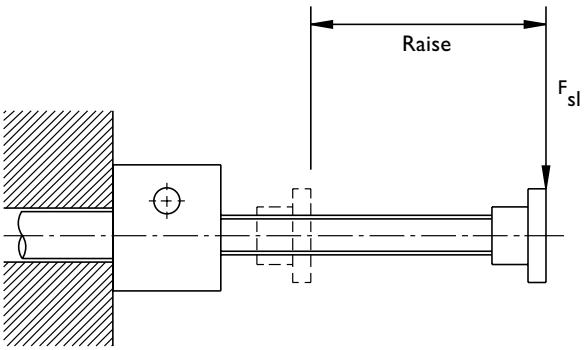

It is recommended that all side loads (F_{sl}) are carried by guides in your arrangement and not by the lifting screw and nut. If there are any side loads on the actuator they must not exceed those tabulated in section 1.5.1.6., and it must be noted that any such loads will adversely affect the life of the lifting screw and nut.

1.1.3.2.6. Radial Forces on Actuator Worm Shaft

For applications where an actuator is belt driven, radial force (F_R) values exerted on the worm shaft must not exceed those tabulated in section 1.5.1.6. Values are tabulated for the Sym-metric and Metric machine screw actuators and Ball Screw actuators. The values are maximum values for the actuators at rated load regardless of worm speed or load direction.

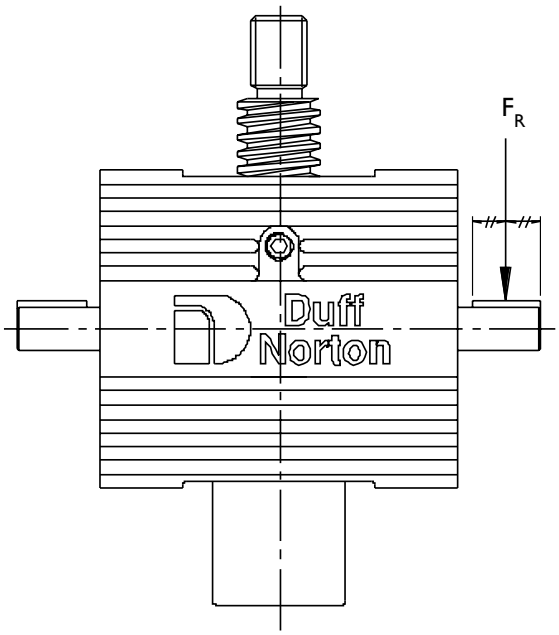

1.1.3.2.7. Actuator Self Lowering and Drift

Most machine screw actuators are self-locking (refer 1.5.2.1.1.8.) either in the gearbox or the lifting screw however to ensure there is no self-lowering and to reduce drift due to the motor slowing a brake motor is recommended (refer 1.5.2.1.4.5.). Standard motor frame size brakes will be suitable for most applications with only slight vibration and thermal fluctuation present. Motor selection as normal. For dynamic braking consult Power Jacks.

Ball screw actuators always require a brake as their high efficiency makes them self-lowering. To calculate the brake torque required for ball screw actuators:

1. Obtain the motor speed (RPM) and inertia value (Mk^2) from the motor manufacturer.
2. Obtain the value for actuator lead and the hold back torque from the actuator performance tables.
3. Select the desired drift after the motor is turned off, note allow as much drift as possible to keep the brake size to a minimum.
4. If a gear reduction unit is used in the drive then the "reducer ratio" is equal to the gear ratio of the reducer.
5. Substitute values in the equation below and solve for the brake torque required by the motor.

$$\text{Motor Brake Torque (Nm)} = \frac{\text{lead (mm)} * \text{RPM}^2 * \text{Mk}^2}{573 * \text{Drift (mm)} * \text{Reducer Ratio}} + \frac{\text{Hold Back Torque (Nm)} * \text{Number of Actuators}}{\text{Reducer Ratio}}$$

Use the closest standard brake size that is greater or equal to the motor brake torque required.

Note
1. *For Machine screw actuators the lowering torque 0.5 * Lifting Torque.*
2. *Self lowering can occur in any actuator system not fitted with a brake where high levels of vibration are present in the application.*
3. *Power Jacks recommend the use of a brake on single actuator applications in the vertical position.*

1.1.3.2.8. Multiple Actuator Configurations

Total Input Power for Actuator Systems (kW), P_s:

$$P_s = \frac{\text{Input Power per Actuator (kW)} * \text{Number of Actuators}}{\text{Arrangement Efficiency} * \text{Gearbox Efficiency}}$$

Number of Actuators in Arrangement	2	3	4	6 → 8
Arrangement Efficiency (%)	95	90	85	80

Gearbox Efficiency = Bevel Gearbox Efficiency * Reduction Gearbox Efficiency

Bevel Gearbox Efficiency = 95% Typical (refer to 4.0.).

Reduction Gearbox Efficiency = Consult unit details, if no reduction gearbox present assume efficiency of 100%

Note *For actuators connected in-line the worm shaft can transmit up to 3 times the torque for a single actuator at its maximum capacity, except the 1820 Unit which can transmit 1.5 times the torque (refer 1.5.2.2.2.).*

1.1.3.2.9. Typical System Configurations

'H' Configuration

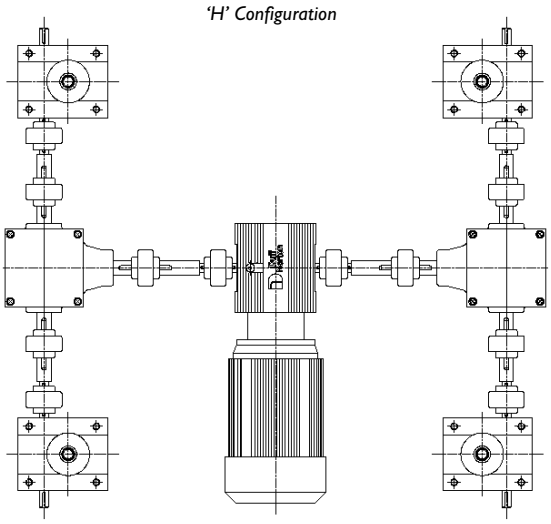

'U' Configuration

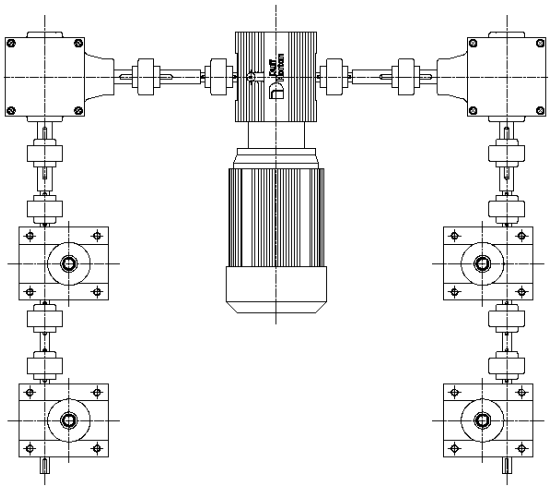

'H' and 'U' configured actuator systems are typical and include actuators, motor, bevel gearboxes, reduction gearboxes, drive shafts, couplings and plummer blocks.

Actuator arrangements can be built in many formats with the use of bevel gear boxes which allow the direction of drive rotation to be selected on assembly. The gear boxes come in 2, 3 and 4 way drive types (refer 4.0).

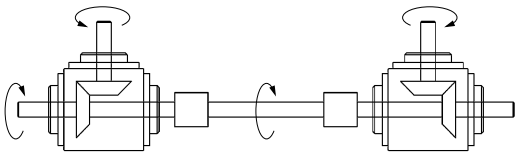

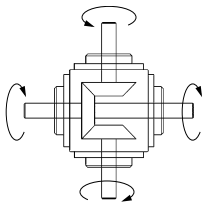

1.1.3.2.10. Other System Configurations

'U' Configuration

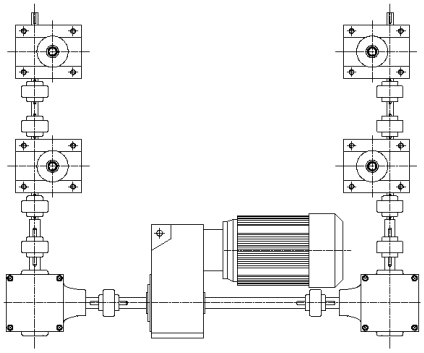

'2H' Configuration

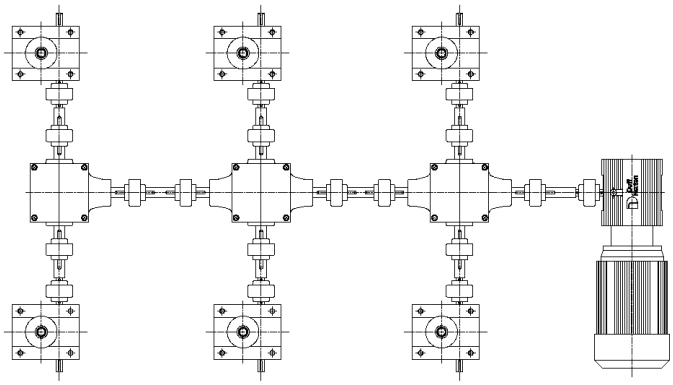

'E' Configuration

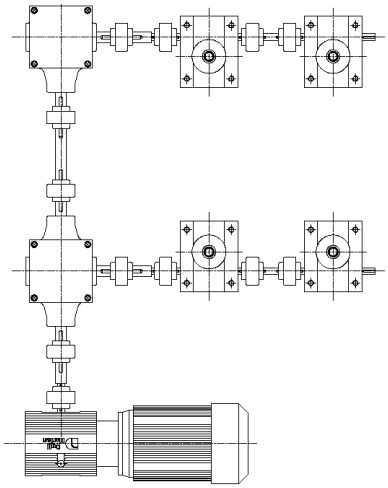

'TF' Configuration

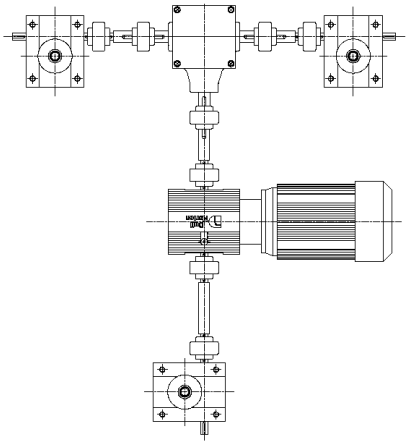

'T' Configuration

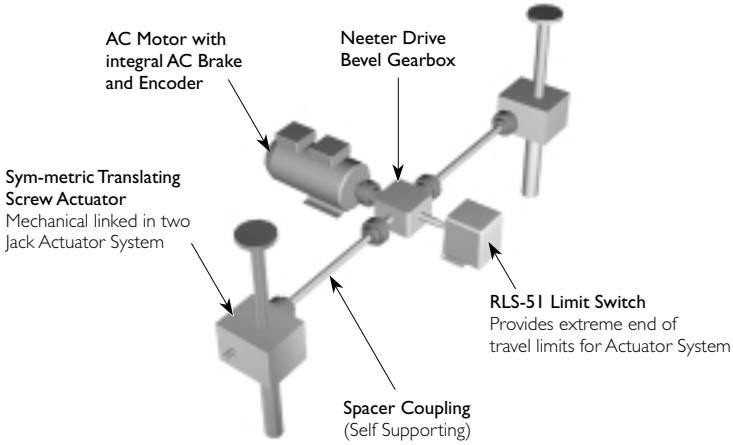

1.1.4. Preview of Actuator Accessories

1.1.4.1. End of Travel Limit Switches

Inductive proximity sensors or electro-mechanical roller plunger switches can be used as end of travel limit switches. These arrangements are typically used as limits to stop the actuator or reverse the drive motor.

Electro-mechanical roller plunger switches triggered by a nut on the lifting screw which depresses the plunger as it passes.

Inductive Proximity sensors trigger when the target nut on the lifting screw passes the sensor. The sensor sends a signal to the control circuit.

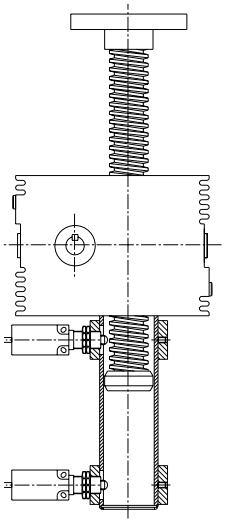

Electro-mechanical Limit Switches

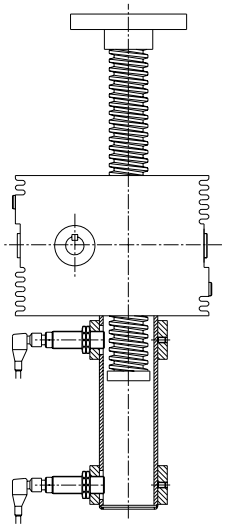

Inductive Proximity Sensors

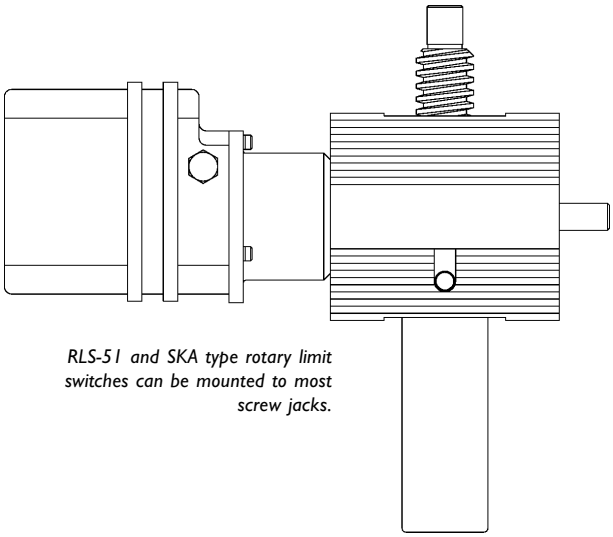

RLS-51 and SKA type rotary limit switches can be mounted to most screw jacks.

Rotary limit switches can be used as end of travel limit switches with the option of intermediate switches as well. These units are mounted onto a screw jacks free worm shaft and offer an alternative where bottom pipe mounted limit switches are not possible e.g. rotating screw jacks. Up to 8 limit switches can be accomodated in one unit.

1.1.4.2. Screw Jacks with Position Indicators

Position indicators can be provided on screw jacks by means of an encoder. The encoder (incremental or absolute) is mounted on a free worm shaft and feedsback to a digital position indicator or other control system. The position indicator can then be calibrated for the application in user units e.g. millimetres of travel are displayed.

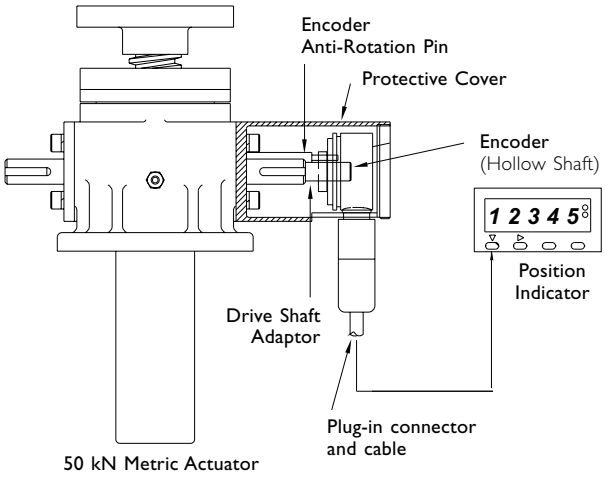

1.1.4.3. Anti-Rotation and Wear Monitoring

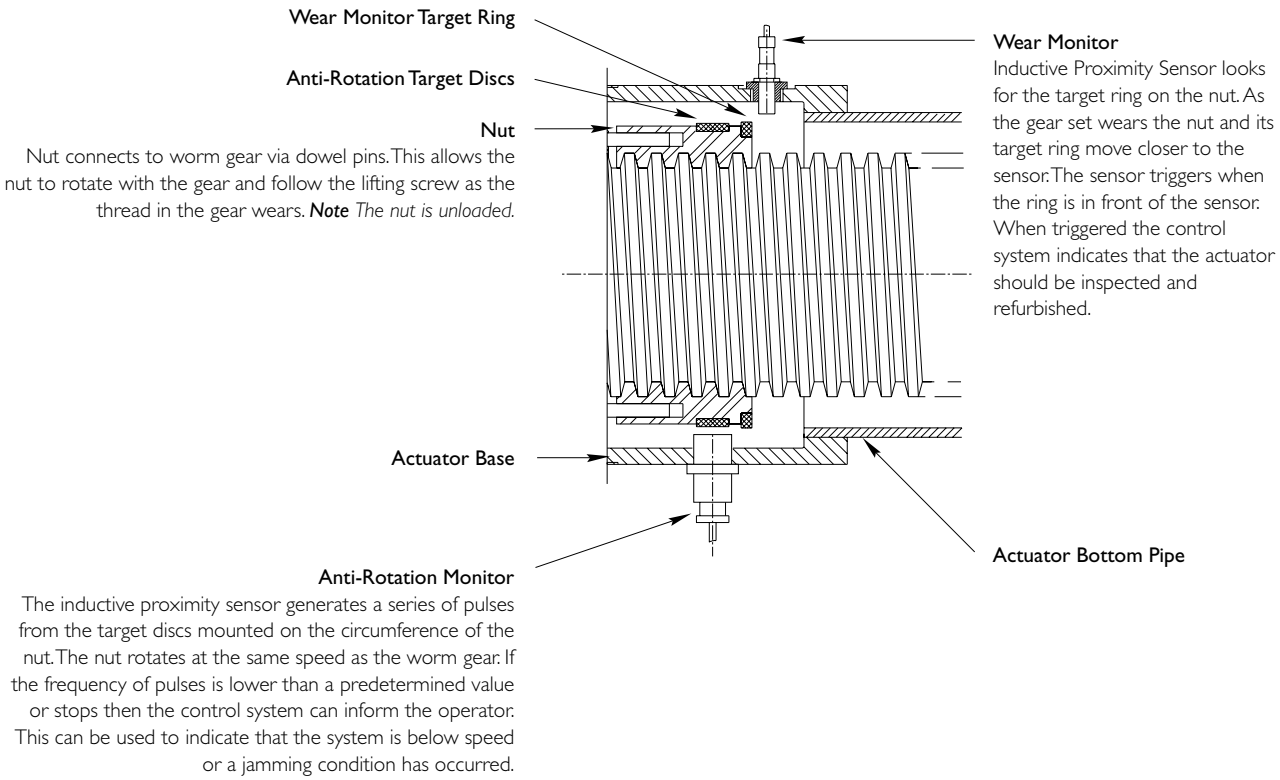

The above arrangement is for a lifting screw in compression because as the gear wears the nut moves away from the gear and towards the sensor. If an actuator were in tension the target ring for the sensor would be to the right of the sensor, as the nut would move towards the gear.

The anti-rotation and wear monitor devices can be supplied together or as separate devices for Power Jacks machine screw actuators. For installation purposes both devices can be accommodated either below the actuator base (as above) or in the actuator's shell cap. Consult Power Jacks Ltd for details.

1.1.4.4. Motor/Gearbox Adaptors

Screw Jacks can be have motors or motorised reduction gearboxes attached via motor adaptor kits. These mount the motor/gearbox unit onto an actuators free worm shaft.

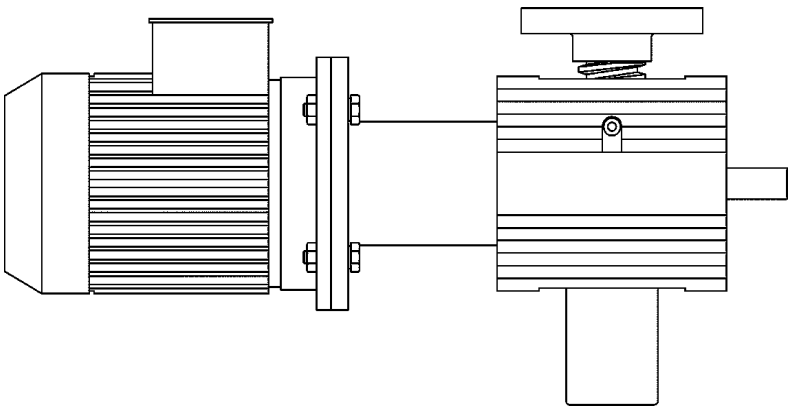

1.1.5. Actuator System Selection Guide

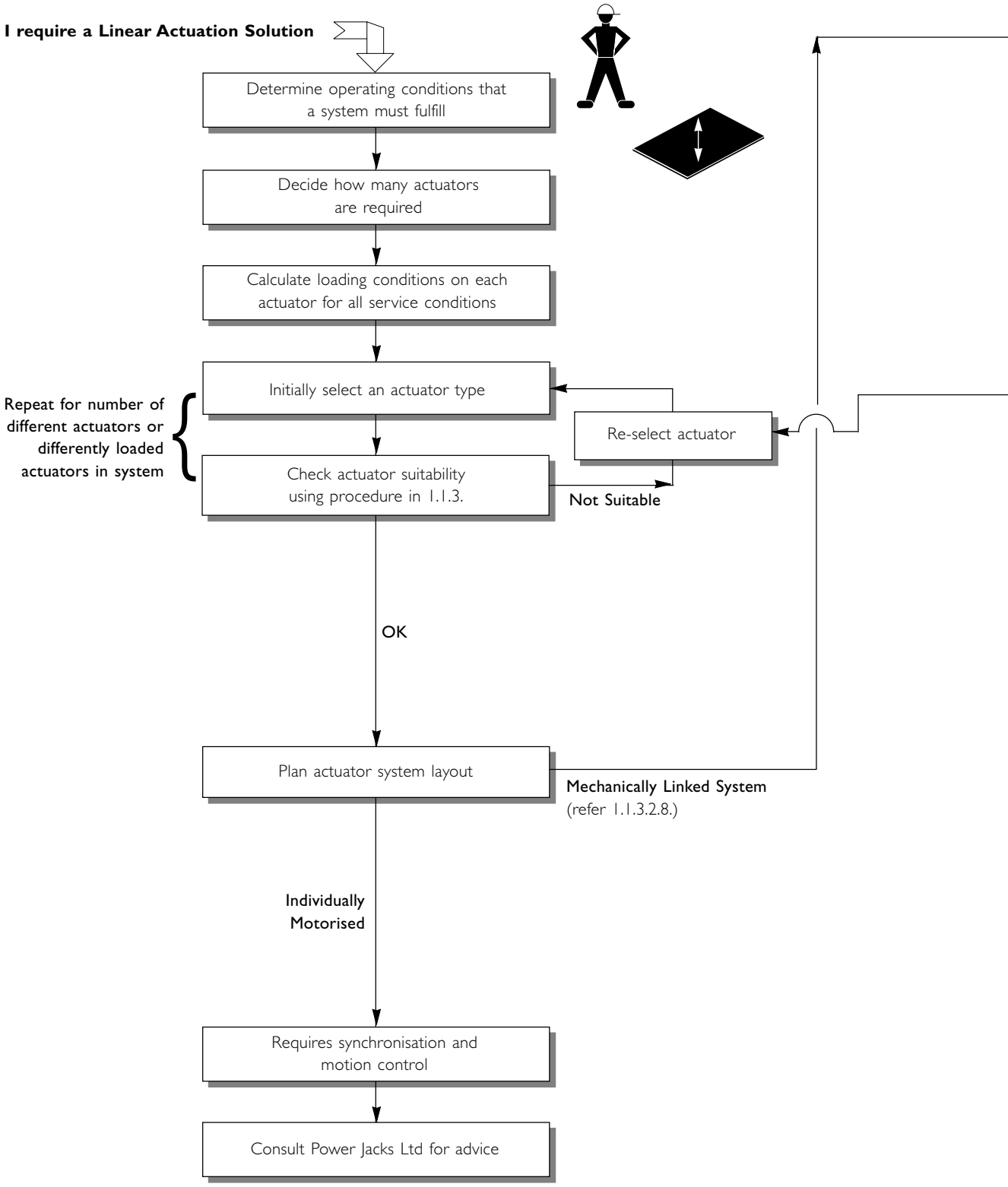

Remember at any time during the selection/specification of any linear actuation system consult Power Jacks Ltd for advice and/or detailed analysis at no extra cost.

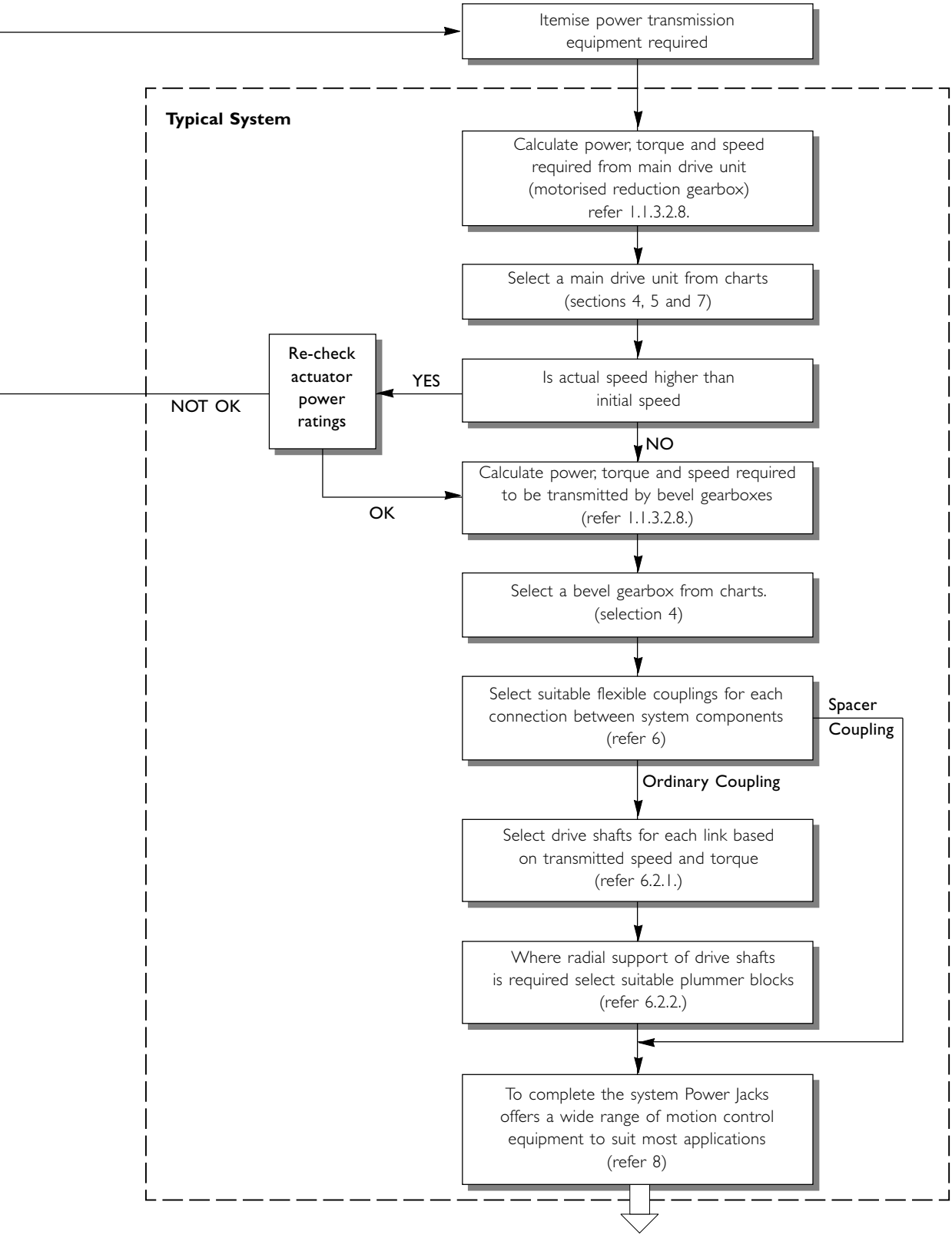

Complete Linear Actuation Solution Provided by Power Jacks Limited

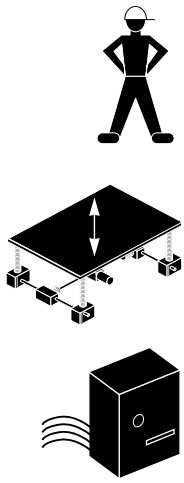

1.1.6. Worksheet/Application Analysis Form

Power Jacks engineers will be pleased to make recommendations for your specific requirements. Complete this form with as much information as possible and send it to the Application Department.

Mail it to Power Jacks Ltd., Maconochie Road, Fraserburgh, AB43 8TE, Scotland.
Or fax +44 (0) 1346 516827
Or email sales@powerjacks.co.uk.

There is no charge for this service.

Use a separate sheet to sketch your application, or send us your design drawings in complete confidence.

Type of Application

How many actuator units needed:		Raise/Unit		mm	
How many bevel gear boxes needed:					
Total working load:		Working load per unit			
Total static load:		Static load per unit			
Side load on lifting screw:		Off centre load on lifting screw:		kN	mm
Operating cycles		per hour	hours per day	days per week	
Life expectancy:		m (metres per cycle x cycles per day x days per year x years of service required)			
Lifting speed desired		mm/min	Drive	Manual	Motor-driven
Load type:	Guided	Unguided	Compression	Tension	Both compression and tension
Ambient conditions:	Vibration	Impact	High temp.	Low temp.	Other
Type of prime mover:	Electric Motor	Air Motor	Hydraulic Motor	Manual	Other
Type of actuator preferred:					
Ultimate use of actuator units:			In-plant		Resale
Quotation desired on the following quantities:			Actuator units		Gear boxes
Name:		Title:			
Company:					
Address:					
Town:		County:			Post Code:
Country:		Phone:			Fax:

Note *A brake is required on ball screw actuator units due to their high efficiency.*

Order Checklist

To ensure you receive the required equipment, please use the following checklist before finalising your order

- Quantity
- Stroke
- Capacity
- Actuator Model
- Type of screw end (top plate, threaded end, etc)
- Submit print if special end configuration is desired
- Gear ratio
- Whether upright, inverted screw, translating screw or rotating screw
- Keyed screw (not standard must be specified)
- Bellows Boot
- Anti-backlash feature (machine screw actuator models only)
- Worm extension - right or left-hand or both (double extension is standard)
- Limit switch and position (state voltage - available as standard with 250 V, 480 V, or 600 V. Also state whether switch is to be mounted on right or left extension of worm shaft)
- Encoder
- Visual position indicator
- Control System
- Motor mounted on actuator
- Call out other special requirements in detail, or submit print with order
- State cargo carried by actuators i.e. industrial only or human cargo

1.1.7. Actuator Product Codes for Ordering

1.1.7.1. S-Series (Sym-metric) Screw Jack Product Code

Character	1	2	3	4	5		6	7	8	9		10	11	12	13		14	15	16	17	18	19	20
Example	S	T	0	2	5	-	1	5	0	0	-	C	I	R	K	-	C	P	C	I	B	3	B

1. SYM-METRIC ACTUATOR
[S]

2. TYPE
[T] - Translating
[R} - Rotating

3-5. RATING (kN)
[025] - 25kN
[050] - 50 kN
[100] - 100 kN
[200] - 200 kN

6-9. RAISE (mm)
0000 - 9999

10. END TYPE
Translating:-
[C] - Clevis End
[E] - Screw Thread
[T] - Top Plate
[A] - Plain

Rotating:-
[P] - Pilot
[N] - No Pilot

11. LIFTING SCREW START
[1] - 1 Start
[2] - 2 Start *

12. GEAR RATIO
[R] - Standard Ratio
[1] - Option 1 Ratio
[2] - Option 2 Ratio
[X] - Special *

13. FEATURES
[0] - None
[K] - Keyed *
[C] - Secondary Guide *
[R] - Anti-Backlash *
[V] - Inverted Screw Anti-Backlash *
[Y] - Keyed Anti-Backlash *
[W] - Inverted Screw Keyed Anti-Backlash *

14. ACTUATOR DESIGNATION
[F] - Factory Designated *
[C] - Customised Feature

15. BOTTOM PIPE
[P] - Bottom Pipe
[F] - No Bottom Pipe

16. LIFTING SCREW THREAD
(Direction of worm rotation to raise load)
[C] - Right Hand (Clockwise)
[A] - Left Hand (Anti-Clockwise) *

17. LIFTING SCREW MATERIAL
[1] - Carbon Steel
[2] - Stainless Steel *

18. SCREW COVER
[0] - None
[B] - Bellows Boot *
[T] - Telescopic *

19. SIDE ADAPTER BOLT HOLES
[0] - None
[1] - Left Hand *
[2] - Right Hand *
[3] - Both *

20. DRIVE SHAFT ENDS
[B] - Standard (Both)
[F] - Left Hand Only
[R] - Right Hand Only

* Cost increase as the product is a variant, this may also effect delivery.

1.1.7.2. E-Series Metric Machine Screw Jack Product Code

Example 200 kN inverted keyed translating machine screw actuator with top plate, 300 mm of raise, bellows boots fitted to protect lifting screw and a single ended worm shaft extension on the right-hand side only.

K	ME	1819	300	BR
(a)	(b)	(c)	(d)	(e)
Prefix	Basic Model	Series No.	Travel of Unit (mm)	Suffix

1.1.7.2.1. Prefixes (a)

S - All Stainless Steel Metric actuator.

K - Keyed Lifting Screw

1.1.7.2.2. Basic Model (b)

TE - Threaded end on lifting screw (standard).

ME - Top Plate on end of lifting screw.

CE - Clevis End on lifting screw.

PE - Plain end, with no machining on end of lifting screw.

DE - Inverted rotating screw actuator.

UE - Upright rotating screw actuator.

CCE - Actuator unit with double clevis mounting arrangement.

Note
1. *For Metric actuators with plain ended lifting screws consult Power Jacks.*
2. *For Metric Stainless Steel actuators with varying materials and/or platings consult Power Jacks.*
3. *For external keyed guides consult Power Jacks.*

1.1.7.2.3. Capacity and Series Designations (c)

Upright Translating Metric Actuator Models

Model Number	2625	2501	1802	1805	1810	1820	1830	1850	18100
Rating (kN)	5	10	25	50	100	200	300	500	1000

Inverted Translating Metric Screw Actuator Models

Decrease the upright model number by 1, e.g. 1804, 50 kN inverted Metric actuator.

Rotating Screw Metric Screw Actuator Models

Increase the upright model number by 1, e.g. 1806, 50 kN rotating Metric actuator.

Anti-Backlash Metric Actuator Models

Replace the first digit in the model number with a 4, e.g. 4805, 50 kN anti-backlash Metric Actuator.

1.1.7.2.4. Third Space Numerals (d)

The characters appearing in this space are to indicate raise in millimetres on all standard units, but not on specials. This space on special actuators helps to identify to our Engineering Department the actual actuator model produced. The numerals do not indicate raise or type of modification performed on special orders.

1.1.7.2.5. Suffix (e)

B - Indicates bellows boot required to protect lifting screw.
G - Secondary guide for the lifting screw.
L - Single-end worm shaft extension on left-hand side only.
R - Single-end worm shaft extension on right-hand side only.
I - Alternate gear ratio required.
X - Supplied without bottom pipe, but with guide bushing.

Note *1. All suffixes (e) that do not conflict with another may be used in series against one actuator unit.*

1.1.7.3. E-Series Metric Ball Screw Jack Product Code

Example 100 kN inverted translating ball screw actuator with clevis end, 300 mm of raise, bellows boots fitted to protect lifting screw and a single ended worm shaft extension on the left-hand side only.

	CE	2809	300	BL
(a)	(b)	(c)	(d)	(e)
Prefix	Basic Model	Series No.	Travel of Unit (mm)	Suffix

1.1.7.3.1. Prefixes (a)

For Future Use.

1.1.7.3.2. Basic Model (b)

TE - Threaded end on lifting screw (standard).
ME - Top plate on end of lifting screw.
CE - Clevis end on lifting screw.
PE - Plain end, with no machining on end of lifting screw.
DE - Inverted rotating screw actuator.
UE - Upright rotating screw actuator.
CCE - Actuator unit with double clevis mounting arrangement.

Note
1. Translating ball screw actuators are the standard and require no prefixes.
2. For Metric actuators with plain ended lifting screws consult Power Jacks Ltd.
3. Stainless Steel actuators with varying materials and/or platings consult Power Jacks Ltd.
4. Anti-rotation devices for the lifting screw consult Power Jacks Ltd for standard options.
5. Pre-loaded ball nuts with zero linear backlash consult Power Jacks Ltd for standard options.
6. All metric ball screw actuators include an integral safety device as standard.
7. All rotating screw ball screw actuators include wiper seals on the ball nut as standard.

1.1.7.3.3. Capacity and Series Designations (c)

Upright Translating Metric Ball Screw Actuator Models

Model Number	28501	2802	2805	2810	2820	2830	2860
Rating (kN)	10	25	50	100	200	300	500

Inverted Translating Ball Screw Actuator Models

Decrease the upright model number by 1, e.g. 2804, 50 kN inverted Metric actuator.

Rotating Ball Screw Actuator Models

Increase the upright model number by 1, e.g. 2806, 50 kN rotating Metric actuator.

Optional Lead Metric Ball Screw Actuator Models

Metric Ball Screw actuators have an increased lead option for the ball screw assembly (typically double the standard option). To specify the optional lead add a "1" to the end of the model number, e.g. 28051, 50 kN upright optional lead Metric Ball Screw actuator.

1.1.7.3.4. Third Space Numerals (d)

The characters appearing in this space is to indicate raise in millimetres on all standard units, but not on specials. This space on special actuators helps to identify to our Engineering Department the actual actuator model produced. The numerals do not indicate raise or type of modification performed on special orders.

1.1.7.3.5. Suffix (e)

B - Indicates bellows boot required to protect lifting screw.

G - Secondary guide for the lifting screw.

L - Single-end worm shaft extension on left-hand side only.

R - Single-end worm shaft extension or right-hand side only.

I - Alternate gear ratio required.

X - Supplied without bottom pipe, but with guide bushing.

Note 1. All suffixes (e) that do not conflict with another may be used in series against one actuator unit.

1.1.7.4. Imperial Actuator Product Codes

For imperial actuator product codes for machine screw or ball screw models in carbon or stainless steel please consult Power Jacks Ltd.

1.2. Machine Screw Jacks

1.2.1. S-Series (Sym-metric) Screw Jacks

Advantages

- Increased Performance
- Robust Construction
- Multiple Arrangements
- Metric Cubic Design
- Positive, Mechanical Positioning
- Double Start Lifting Screw (optional)
- Easy Mounting
- Uniform, Lifting Speed
- Anti-Backlash Feature (optional)

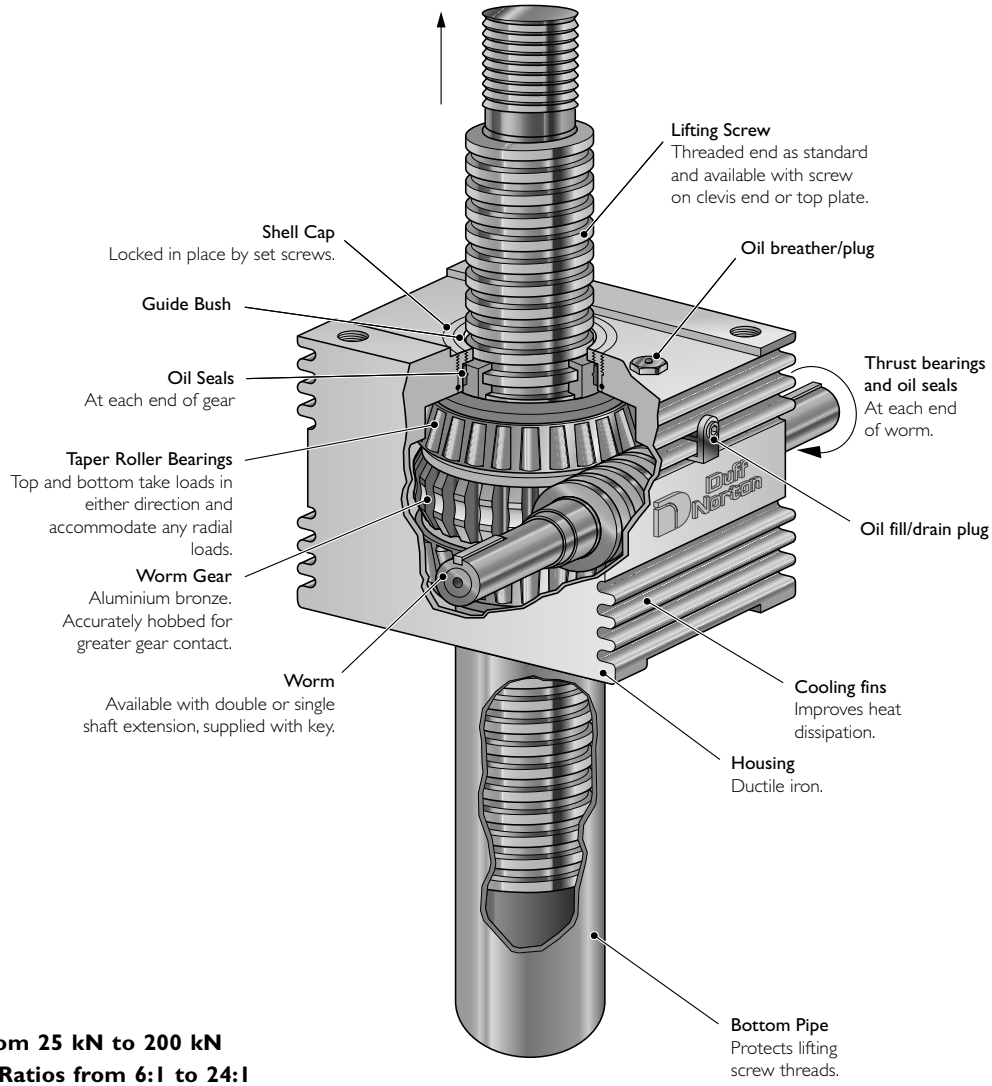

Capacities from 25 kN to 200 kN
Worm Gear Ratios from 6:1 to 24:1
Single and Double Start Lifting Screws

The Sym-metric actuator range was designed and manufactured in the UK. The actuators design offers higher performance, through higher thermal efficiency, from a machine screw actuator in a cubic style housing for ready mounting, e.g. upright and inverted positions in one standard unit. The actuator's design includes many new standard features satisfying almost any requirement. Operated manually or by motor units Sym-metric actuator models can be used singly, in tandem or in multiple arrangements (refer 1.1.3.2.9.). Since most capacities have a uniform lifting speed, added economy can be realised in raising unevenly distributed loads by operating the different capacities in unison.

Most Sym-metric actuator models with higher ratios are self-locking and will hold heavy loads in position indefinitely without creep under ideal conditions. They can be used to push, pull, apply pressure and as linear actuators. They are furnished with standard raises in increments of 25 mm. Depending upon size and type of load, models are available with raises up to 6 metres.

More Than 5000 Standard Combinations

Features

- **Increased Performance** - The design uses an oil filled, finned cubic housing designed for improved thermal efficiency, extending the duties and/or lowering working temperatures possible.
- **Flexible Mounting** - The standard actuator can be mounted in either upright or inverted positions and the side faces can be provided with bolt holes for accessory mounting.
- **Precise Positioning** - Can be controlled accurately for positioning within hundredths of a millimetre.
- **Self-Locking** - Will normally hold loads in position without creeping when using the higher ratio units, as long as the actuator unit is not subject to vibration or cyclic temperature variations. If self-locking is critical a brake motor or other restraining device should be considered.
- **Uniform Lifting Speed** - Since many models have the same gear ratios, various capacities can be used in the same application to lift unevenly distributed loads with uniform speed.
- **Quick, Sure Operation** - Designed and built to be positive acting, for accurate response to motive power.

Options

- **Translating or Rotating Screw Models**
- **Three Standard Gear Ratios**
- **Anti-Backlash Option** - Reduces vertical backlash between the screw and the worm gear nut to a practical minimum for smooth, precise operation and minimum wear.
- **Double Start Lifting Screw** - Standard option for increased raise rate.
- **Keyed Option** - Stops a translating screw from rotating when the screw ends are free.
- **Secondary Guide Option** - Increases lifting screw lateral rigidity aiding screw guidance and improved side load resilience.
- **Bellows Boot Option** - Protects the screw from dust, dirt, moisture and corrosive contaminants.
- **Side Bolt Hole Options** - Provided for drive shaft accessories such as standard motor adaptors.
- **Screw End Types** - Include clevis end, threaded end, top plate and plain end.

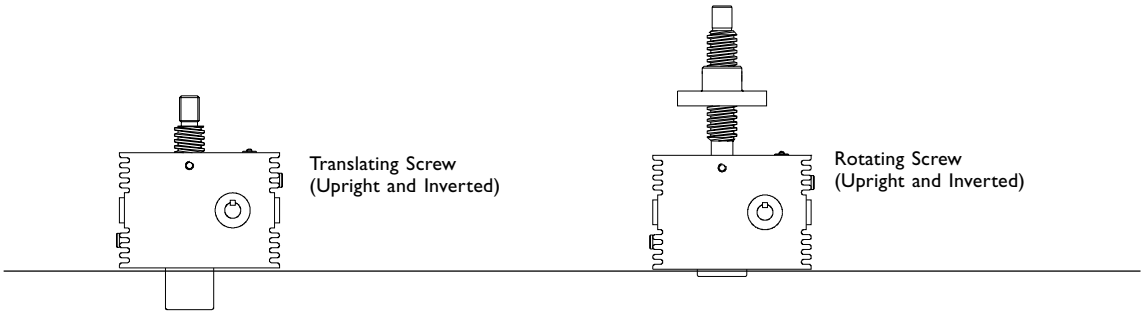

Note *Clockwise rotation of worm raises load on all models (refer previous page) - counter clockwise available at extra charge.*
Unless a translating lifting screw is keyed, the top should be bolted to the lifting member to prevent the screw from rotating.
Actuators are equipped with sightglass oil plug and breather fittings.
Recommended lubricants are listed in the installation and maintenance instructions (refer 1.5.3.).
Actuators supplied complete with drive shaft keys.
Wherever possible loads should be guided, if not consult Power Jacks Ltd.

Attachments

IEC and Nema C-Face flanges, motors, gear boxes, reducers and couplings available for single actuator drive or multiple actuator arrangements (refer 6, 7 and 8).

Motion control components include Motor Drives, Motion Controllers with operator interfaces, encoders, limit switches, potentiometers and meters with LCD display (refer 8.).

1.2.1.1. Performance of Standard S-Series (Sym-metric) Actuators

Actuator Model			ST025		ST050		ST100		ST200	
Capacity (kN)			25		50		100		200	
Lifting Screw		Diameter	Ø30		Ø40		Ø55		Ø65	
		Pitch	6 mm		9 mm		12 mm		12 mm	
		No. of Starts*	1	2	1	2	1	2	1	2
Worm Gear Ratios		Standard	6:1		6:1		8:1		8:1	
		Option 1	8:1		8:1		6:1		6:1	
		Option 2	24:1		24:1		24:1		24:1	
Turn of worm for raise of lifting screw	1 Turn	Standard	1 mm	2 mm	1.5 mm	3 mm	1.5 mm	3 mm	1.5 mm	3 mm
	4 Turn	Option 1	3 mm	6 mm	4.5 mm	9mm	8 mm	16 mm	8 mm	16 mm
	4 Turn	Option 2	1 mm	2 mm	1.5 mm	3 mm	2 mm	4 mm	2 mm	4 mm
Maximum Input Power per Actuator (kW)		Standard	1.5		3.0		3.75		3.75	
		Option 1	1.5		3		3.75		3.75	
		Option 2	0.375		0.550		1.125		1.125	
Start-Up Torque at full Load (Nm) †		Standard	19	26	54	73	111	151	252	330
		Option 1	15	20	44	59	140	190	317	416
		Option 2	8	11	24	33	57	77	129	168
Weight with base raise of 150mm (kg)			13		25		41		70	
Weight for each additional 25mm raise (kg)			0.21		0.32		0.57		0.86	

* *Single start lifting screw is standard.*

† *For loads of 25% to 100% of actuator capacity, torque requirements are approximately proportional to the load.*

Sym-metric Actuator Efficiencies

Model	Gear Ratio	Lifting Screw Start	Static Input Speed Zero rpm	Dynamic Input Speed (rpm)			
				50	750	1000	1500
ST025	6:1	1	0.209	0.262	0.299	0.302	0.309
		2	0.314	0.379	0.434	0.438	0.448
	8:1	1	0.194	0.247	0.288	0.293	0.301
		2	0.293	0.358	0.418	0.424	0.436
	24:1	1	0.121	0.164	0.220	0.226	0.239
		2	0.183	0.238	0.320	0.328	0.347
ST050	6:1	1	0.222	0.281	0.324	0.329	0.337
		2	0.325	0.398	0.460	0.466	0.477
	8:1	1	0.206	0.264	0.312	0.318	0.328
		2	0.302	0.374	0.442	0.451	0.465
	24:1	1	0.125	0.171	0.238	0.246	0.263
		2	0.184	0.242	0.337	0.349	0.372
ST100	6:1	1	0.227	0.285	0.324	0.329	0.336
		2	0.336	0.407	0.462	0.469	0.479
	8:1	1	0.214	0.272	0.315	0.320	0.328
		2	0.317	0.389	0.450	0.456	0.468
	24:1	1	0.140	0.188	0.252	0.260	0.274
		2	0.207	0.269	0.359	0.370	0.391
ST200	6:1	1	0.201	0.255	0.289	0.294	0.300
		2	0.307	0.375	0.426	0.432	0.442
	8:1	1	0.190	0.243	0.282	0.286	0.293
		2	0.290	0.358	0.415	0.421	0.431
	24:1	1	0.124	0.168	0.225	0.232	0.245
		2	0.189	0.248	0.331	0.341	0.361

Note *Values for standard oil lubricated Sym-metric actuators only, ref: BS 721 part 2. with grease lubricated lifting screw.*

1.2.1.2. Standard Sym-metric Translating Screw Actuators

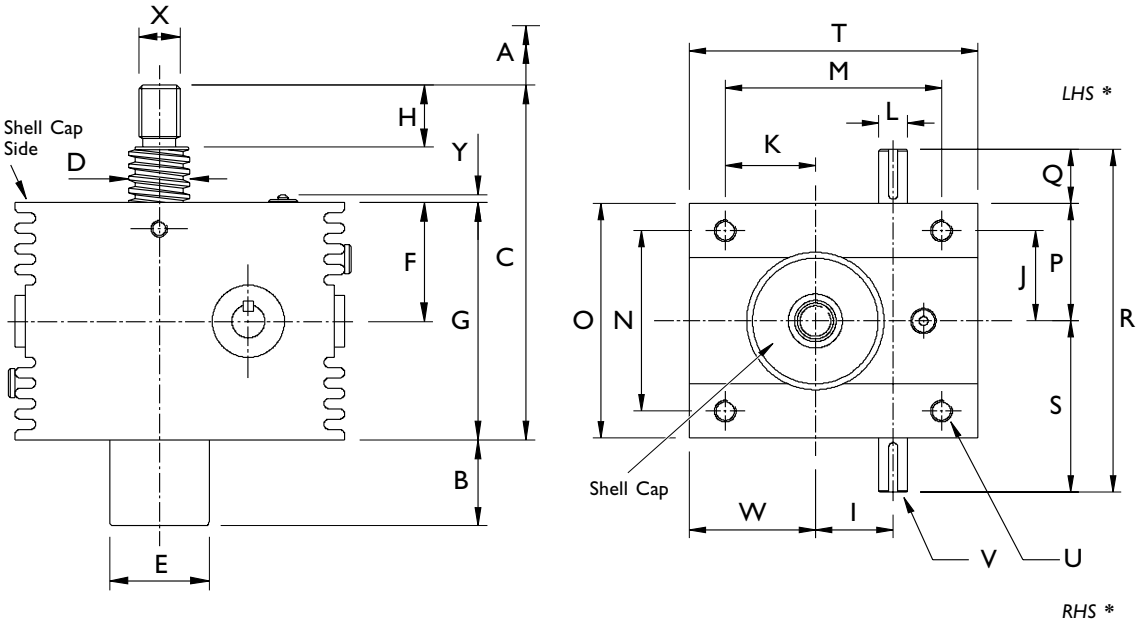

Note *All dimensions in millimetres.*
** When viewed in direction of Shell Cap LHS = Left Hand Side RHS = Right Hand Side*

Model	ST025	ST050	ST100	ST200
A	Raise as Required			
B	Raise	Raise	Raise	Raise
C	Min Closed Height 157	Min Closed Height 192	Min Closed Height 224	Min Closed Height 265
D	Ø30	Ø40	Ø55	Ø65
E	Ø50	Ø60	Ø76	Ø95
F	57.5	72.5	85	97.5
G	115	145	170	195
H	30	35	40	55
I	43.26 +0.050 -0.000	55.58 +0.050 -0.000	66.0 +0.060 -0.000	66.0 +0.070 -0.000
J	50	62.5	72.5	82.5
K	50	60	65	72.5
L	Ø16 h8	Ø19 h8	Ø25 h8	Ø28 h8
M	120	155	165	190
N	100	125	145	165
O	130	160	190	220
P	65	80	95	110
Q	30	35	50	50
R	190	230	290	320
S	95	115	145	160
T	160	200	235	275
U	M12 x 1.75 x 16 Deep	M16 x 2 x 24 Deep	M20 x 2.5 x 30 Deep	M24 x 3 x 36 Deep
V	5 x 5 x 25	6 x 6 x 32	8 x 7 x 40	8 x 7 x 40
W	70	83	100	115
X	M20 x 2.5	M24 x 3	M36 x 4	M48 x 5
Y	4 Max	4 Max	4 Max	4 Max

Note *Dimensions subject to change without notice.*

1.2.1.3. Standard Sym-metric Rotating Screw Actuators

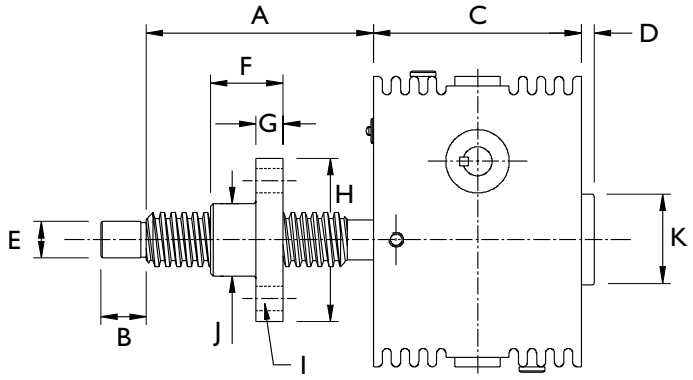

Note *For other dimensions and performance data refer to translating screw models.*

Model	Rating kN	A	B	C	D	E	F	G	H	I	J	K
SR025	25	Raise + 60	25	115	15	20	40	15	90	4 Holes - 13.5 Dia. on 65 P.C.D.	40	50
SR050	50	Raise + 80	30	145	15	25	65	20	115	4 Holes - 18 Dia. on 85 P.C.D.	55	62
SR100	100	Raise + 100	50	170	31	35	75	25	160	4 Holes - 22 Dia. on 120 P.C.D.	80	76
SR200	200	Raise + 100	65	195	50	45	75	25	185	4 Holes - 26 Dia. on 135 P.C.D.	90	95

1.2.1.4. Standard Translating Screw Ends

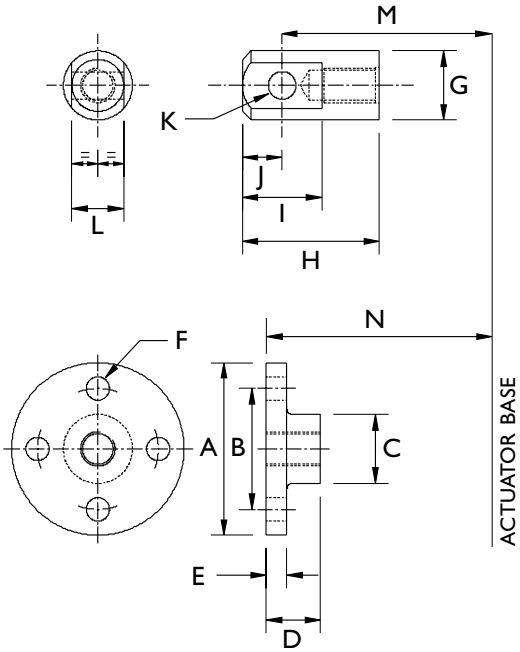

Model	ST025	ST050	ST100	ST200
A	Ø100	Ø120	Ø150	Ø170
B	P.C.D. 70	P.C.D. 85	P.C.D. 110	P.C.D. 120
C	Ø40	Ø50	Ø65	Ø75
D	31.5	36.5	42	58
E	12	16	20	25
F	Ø13.5	Ø18	Ø22	Ø26
G	Ø40	Ø50	Ø65	Ø75
H	79.5	91.5	120	143
I	46	60	66	80
J	23	30	33	40
K	Ø16	Ø20	Ø22	Ø30
L	30	35	40	50
M	182	217	269	310
N	157	192	224	265

Note *Dimensions subject to change without notice.*

1.2.1.5. Sym-metric Actuators with Anti-Backlash Feature

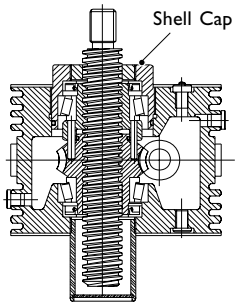

Sym-metric actuators are available with anti-backlash nuts for applications where a reversal of loading from tension to compression is encountered.

Anti-Backlash Features

- Reduction in the vertical backlash between the screw and the worm gear nut to a practical minimum for smoother, more precise operation and minimum wear.
- Acts as a safety device, providing a dual nut load carrying unit, when the worm gear becomes worn.
- Wear indicator for critical applications.

The anti-backlash feature can be maintained by adjusting the shell cap until the desired amount of backlash is achieved. To avoid binding and excessive wear, do not adjust lifting screw backlash to less than 0.013 mm (refer 1.5.2.1.1.7.).

Optional

Anti-Backlash actuators are available with inverted screws to increase mounting flexibility as access is required to the shell cap to allow backlash adjustment. The bottom pipe (*) for these actuators screw into the shell cap. For keyed actuators the position of the keyed hub (**) remains as shown.

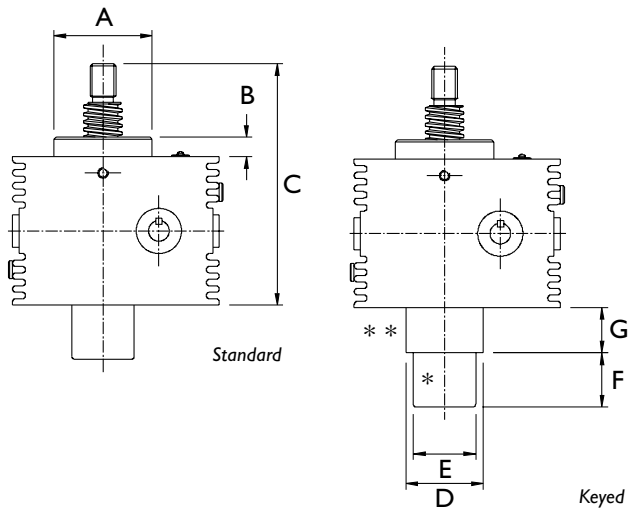

Standard Dimensions (mm)

Model	Standard (R)			Keyed (Y)			
	A	B	C	D	E	F	G
ST025-R (Y)	76	15	172	60	50	Raise	35
ST050-R (Y)	100	25	217	75	60	Raise	42
ST100-R (Y)	127	28	252	90	76	Raise	52
ST200-R (Y)	145	34	299	102	95	Raise	63

Torque and Efficiencies for Standard Anti-Backlash Actuators

Model		ST025-R		ST050-R		ST100-R		ST200-R	
Capacity (kN)		25		50		100		200	
Lifting Screw No, of Starts		Single	Double	Single	Double	Single	Double	Single	Double
Torque at Full Load (Nm)	Standard	21	28	60	82	124	168	279	367
	Option 1	17	23	48	66	155	211	352	461
	Option 2	9	12	26	36	63	86	142	187
Static Actuator Efficiency Rating	Standard	0.188	0.282	0.200	0.293	0.193	0.285	0.171	0.260
	Option 1	0.175	0.263	0.186	0.272	0.205	0.302	0.181	0.276
	Option 2	0.109	0.164	0.113	0.165	0.126	0.186	0.112	0.170
Weight with base raise of 150 mm (kg)		13.4		26.5		43.5		74	

Note 1. *Refer 1.1.7.1. for Sym-metric product code structure.*
2. *For loads from 25% to 100% of actuator capacity, torque requirements are approximately proportional to the load.*
3. *Dimensions are subject to change without notice.*

1.2.1.6. Sym-metric Actuators with Key or Secondary Guide

- A Keyed translating screw actuator stops the screw from rotating without the need for end pinning. However the key-way in the screw will cause greater than normal wear on the internal threads of the worm gear.
- Secondary Guiding for the screw for greater lateral rigidity aiding screw guidance and improved side load resilience.

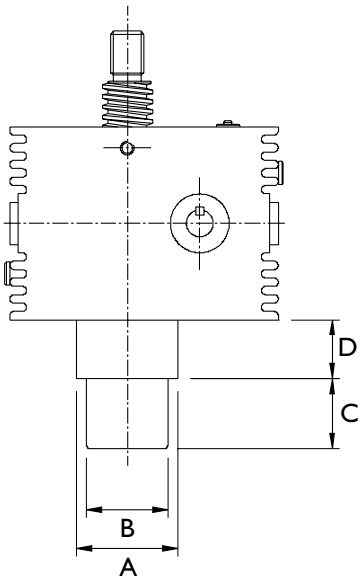

Standard Keyed Dimensions

Model	ST025-K	ST050-K	ST100-K	ST200-K
A	60	75	90	102
B	50	60	76	95
C	Raise	Raise	Raise	Raise
D	35	38	52	63

Standard Secondary Guide Dimensions

Model	ST025-C	ST050-C	ST100-C	ST200-C
A	60	70	90	100
B	50	60	76	95
C	Raise	Raise	Raise	Raise
D	20	20	20	20

Note *Dimensions in mm.*

1.2.1.7. Standard Flange Bolt Configuration for Actuator Sides

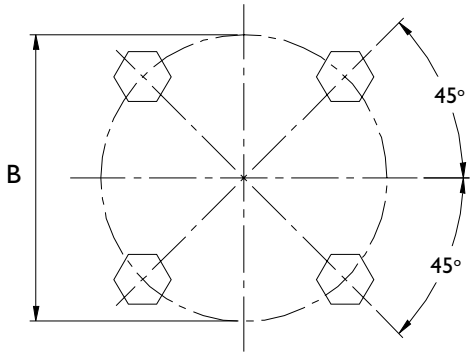

Model	'B' Bolt P.C.D. (mm)	Bolt Information
ST025	46	M6 x 1 mm Pitch, 14 mm Deep
ST050	61	M8 x 1.25 mm Pitch, 22 mm Deep
ST100	70	M8 x 1.25 mm Pitch, 14 mm Deep
ST200	88	M10 x 1.5 mm Pitch, 14 mm Deep

Note *Dimensions are subject to change without notice.*

1.2.1.8. Sym-metric Actuators with Bellow Boots

Example Bellows Boot Actuator

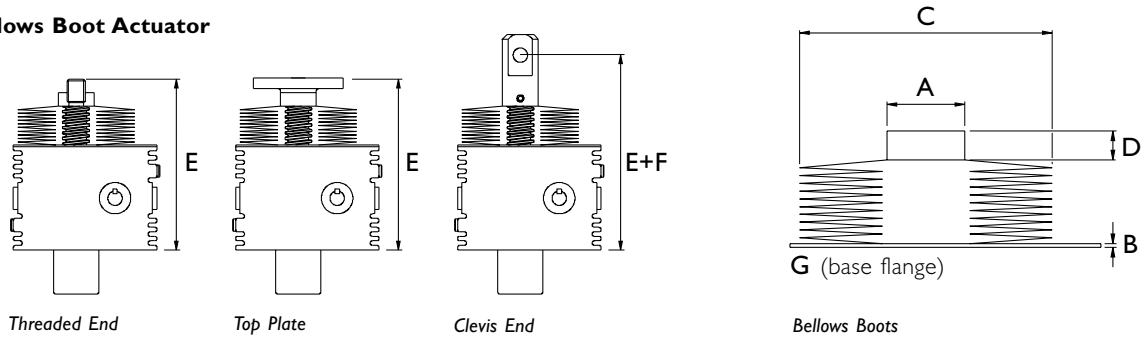

Model		ST025-B	ST050-B	ST100-B	ST200-B
A		Ø40	Ø50	Ø65	Ø75
B		2	2	3	3
C*		Ø130	Ø140	Ø150	Ø170
D		10	10	10	10
E Closed Height	Raise 0 → 300	157	192	224	265
	Raise 300 → 600	171	206	238	279
	Raise 600 → 1050	189	224	256	297
	Raise 1050 →1500	208	244	275	317
	Raise 1500 → 1800	228	258	295	331
	Raise 1800 → 2150	-	-	305	351
	Raise 2150 → 2500	-	-	320	366
Extra Closed Height (E) for Keyed Anti-Backlash Units		+15	+25	+28	+34
F	Extra Closed Height for Clevis End	+25	+25	+45	+45

Note 1. *The bellows boot fixes via an adapter flange (G) to the actuator housing mounting bolt holes.*
2. ** For raises of 1500+ control tapes are fitted (approximately 20 mm external diameter increase). Clipped every third vee.*
3. *Supplied complete with one corrosion resistant jubilee clip suitable for fitting over collar diameter.*

Example Bellows Boot Actuator

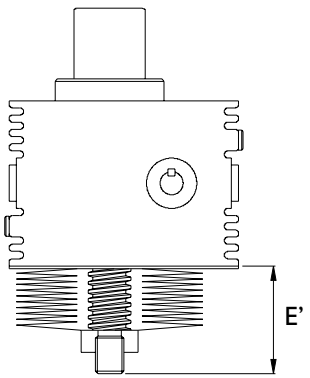

Anti-Backlash Units with Inverted Lifting Screws					
Model		ST025-VB	ST050-VB	ST100-VB	ST200-VB
E' Closed Height	Raise 0 → 300	42	47	54	70
	Raise 300 → 600	56	61	68	84
	Raise 600 → 1050	74	79	86	102
	Raise 1050 → 1500	93	99	105	122
	Raise 1500 → 1800	113	113	125	136
	Raise 1800 → 2150	-	-	135	156
	Raise 2150 → 2500	-	-	150	171
Extra Closed Height (E) for Keyed Anti-Backlash		+23	+33	+35	+44
F	Extra Closed Height for Clevis End	+25	+25	+45	+45

Note *Dimensions are subject to change without notice.*

1.2.1.9. Motor Adaptors for Sym-metric Screw Jacks

Motor Adaptors		Actuator Rating (kN)			
		25			
Frame Size	Motor Mounting	Std Part	A	B	C (squ)
71	B5	✔	166	14	80
	B14 C105	✗	-	-	-
80	B5	✔	181	14	80
	B14 C120	✔	166	14	80
90	B5	✔	181	14	80
	B14 C140	✔	166	14	80
100	B5	✔	181	14	80
	B14 C160	✔	181	14	80
112	B5	✗	-	-	-
	B14 C190	✗	-	-	-
132	B5	✗	-	-	-
	B14 C200	✗	-	-	-

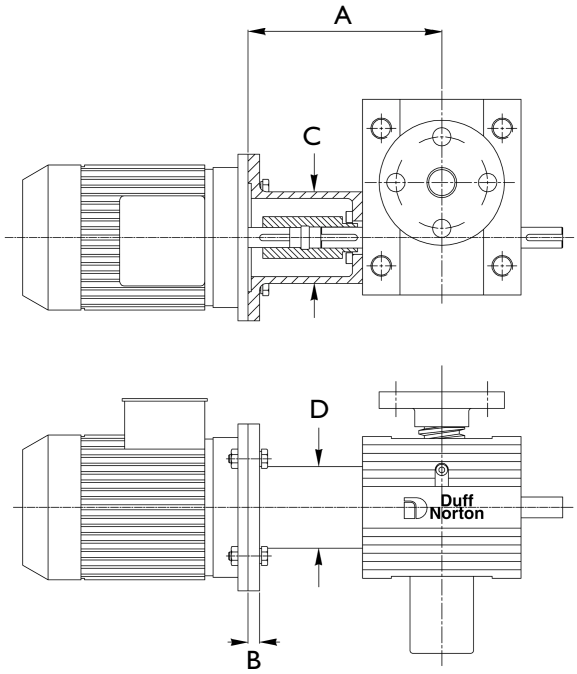

Motor Adaptors		Actuator Rating (kN)				Actuator Rating (kN)					Actuator Rating (kN)				
		50				100					200				
Frame Size	Motor Mounting	Std Part	A	B	C (squ)	Std Part	A	B	C (squ)	D	Std Part	A	B	C (squ)	D
71	B5	✗	-	-	-	✗	-	-	-	-	✗	-	-	-	-
	B14 C105	✗	-	-	-	✗	-	-	-	-	✗	-	-	-	-
80	B5	✔	203	14	100	✗	-	-	-	-	✗	-	-	-	-
	B14 C120	✗	-	-	-	✗	-	-	-	-	✗	-	-	-	-
90	B5	✔	203	14	100	✔	232	14	110	98	✔	247	14	110	98
	B14 C140	✗	-	-	-	✔	232	14	110	98	✔	247	14	110	98
100	B5	✔	225	14	100	✔	232	14	110	98	✔	247	14	110	98
	B14 C160	✔	203	14	100	✔	232	14	110	98	✔	247	14	110	98
112	B5	✔	225	14	100	✔	232	14	110	98	✔	247	14	110	98
	B14 C190	✔	203	14	100	✔	232	14	110	98	✔	247	14	110	98
132	B5	✔	225	14	100	✗	-	-	-	-	✗	-	-	-	-
	B14 C200	✔	225	14	100	✔	252	14	110	98	✔	267	14	110	98

Note 1. *All dimensions are in millimetres (mm) unless otherwise stated.*
2. *Dimensions are subject to change without notice.*
3. *Other IEC frame sizes are available on request*
4. *NEMA motor adaptors are available on request.*
5. ***For motor specifications refer to section 7.***

1.2.1.10. Trunnion Mounts for Sym-metric Actuators

25, 50 & 100 kN Models

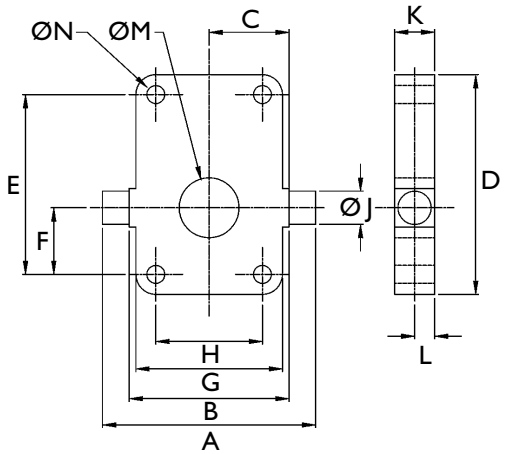

Actuator Rating (kN)	A	B	C	D	E	F	G	H	J (h6)	K	L	M	N	Weight (kG)
25	180	140	70	160	120	50	130	100	25	30	15	72	13	3.7
50	210	170	85	200	155	60	160	125	35	40	20	95	17	9.3
100	270	200	100	235	165	65	190	145	45	50	25	130	21	16.3
200	Available on request													

Trunnion mounts bolt onto actuator base plates.

Note: *1. Trunnion mounts for other actuator sizes are available on request.*
2. All dimensions in millimetres (mm) unless otherwise stated.
3. Dimensions subject to change without notice.

Example diagram of actuator with trunnion mount fitted

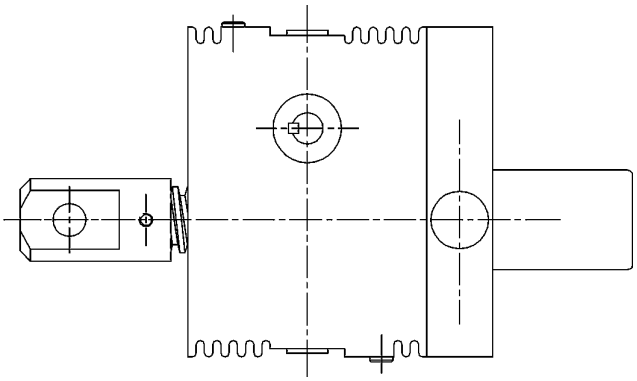

1.2.1.11. RLS-51 Rotary Limit Switch Adaptors for Sym-metric Screw Jacks

Rotary limit switches can be used as end of travel limit switches with the option of intermediate switches as well. These units are mounted onto a screw jacks free worm shaft and offer an alternative where bottom pipe mounted limit switches are not possible e.g. rotating screw jacks. Up to 8 limit switches can be accommodated in one unit.

For full details on the RLS-51 limit switch refer to section 8.1.1.

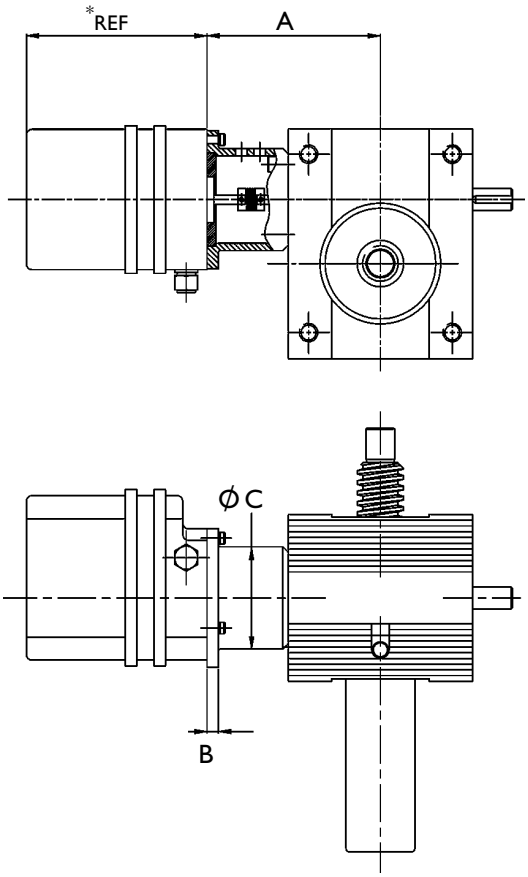

Sym-metric Actuator Rating (kN)								
	25				50			
Adaptor Mounting	Std Part	A	B	C (squ)	Std Part	A	B	C (squ)
B5	✗	-	-	-	✗	-	-	-
B14	✔	138	10	70	✔	151	10	89

Sym-metric Actuator Rating (kN)								
	100				200			
Adaptor Mounting	Std Part	A	B	C (squ)	Std Part	A	B	C (squ)
B5	✔	172	13	98	✔	201	13	125
B14	✗	-	-	-	✗	-	-	-

The mounting kit includes the flexible coupling and drive adaptor.

Note *1. All dimensions are in millimetres (mm) unless otherwise stated.*
2. Dimensions are subject to change without notice.

1.2.1.12. SKA Rotary Limit Switch Adaptors for Sym-metric Screw Jacks

The SKA rotary limit switch is a compact 2-position limit switch designed for screw jack and linear actuator applications. For mounting details for Sym-metric actuators please consult Power Jacks Ltd. For full details on the SKA limit switch refer to section 8.1.2.

1.2.1.13. Encoder Adaptors for Sym-metric Screw Jacks

Both incremental and absolute encoders can be mounted on a Sym-metric actuators free worm shaft. The specification for these encoders is given in section 8.3. For mounting details please consult Power Jacks Ltd.

1.2.1.14. Limit Switch Mounted on Sym-metric Actuator Bottom Pipe

1.2.1.14.1. Sym-metric Actuator with End of Travel Proximity Sensors

Sensor Kit

- Inductive Proximity Sensors as standard others available on request.
- No contact, so no wearing parts.
- 2 Wire sensor for either Normally Closed (NC) or Normally Open (NO) switching.
- Sensor has rugged one-piece Metal housing.
- Optical setting aid with 2 LED Colour settings:- Red LED indicates just in sensing range. Yellow LED only indicates within 80% safe sensing range.
- M12 Plug in connection for fast change-ability.
- M12 sockets available straight or angled with 5-m cable (other cable lengths available on request).
- Full 360° visibility for switching with 4 yellow LED's at 90° offset.
- Sensor kit includes - sensor, mounting ring, target ring and modification to actuators bottom pipe.
- For full sensor details refer to section 8.2.1.

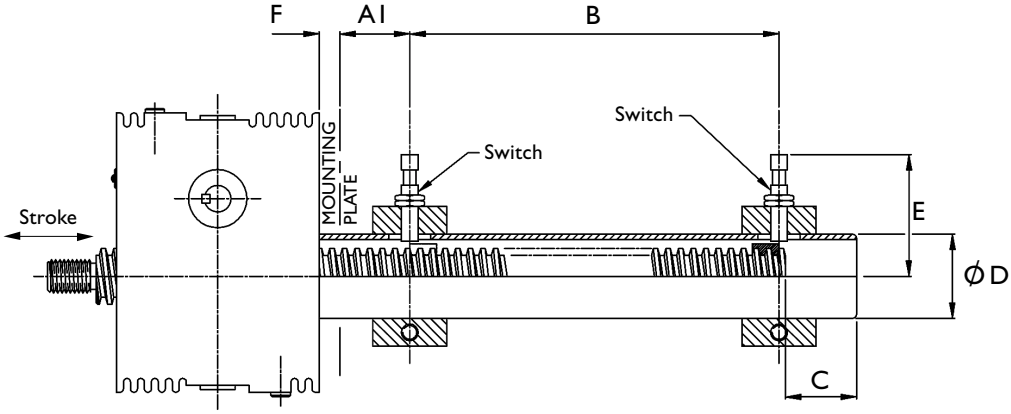

Sym-metric Actuator Rating (kN)								
Actuator Rating (kN)	Switch Dia (mm)	A1 (mm)	B (mm)	C (mm)	D (Ø mm)	E (mm) ±5	F (mm)	Switch Adjustment(mm)
25	12	50	Stroke +15	25	50	83	15	±10
50	12	50	Stroke +18	35	60	90	15	±10
100	18	50	Stroke +24	50	76	103	20	±10
200	18	50	Stroke +24	55	95	110	20	±10

Note 1. *All dimensions in mm unless otherwise stated.*
2. *Dimensions subject to change without notice.*

1.2.1.14.2. Sym-metric Actuator with End of Travel Electro-Mechanical Switches

The actuators can be fitted with electro-mechanical limit switches in a similar design. For dimensions please consult Power Jacks. For limit switch details refer to section 8.2.2. and 8.2.3.

Example Switches

1.2.2. E-Series Metric Machine Screw Jacks

Advantages

- Positive, Mechanical Positioning
- Multiple Arrangements
- Uniform, Lifting Speed
- Anti-Backlash Feature (optional)

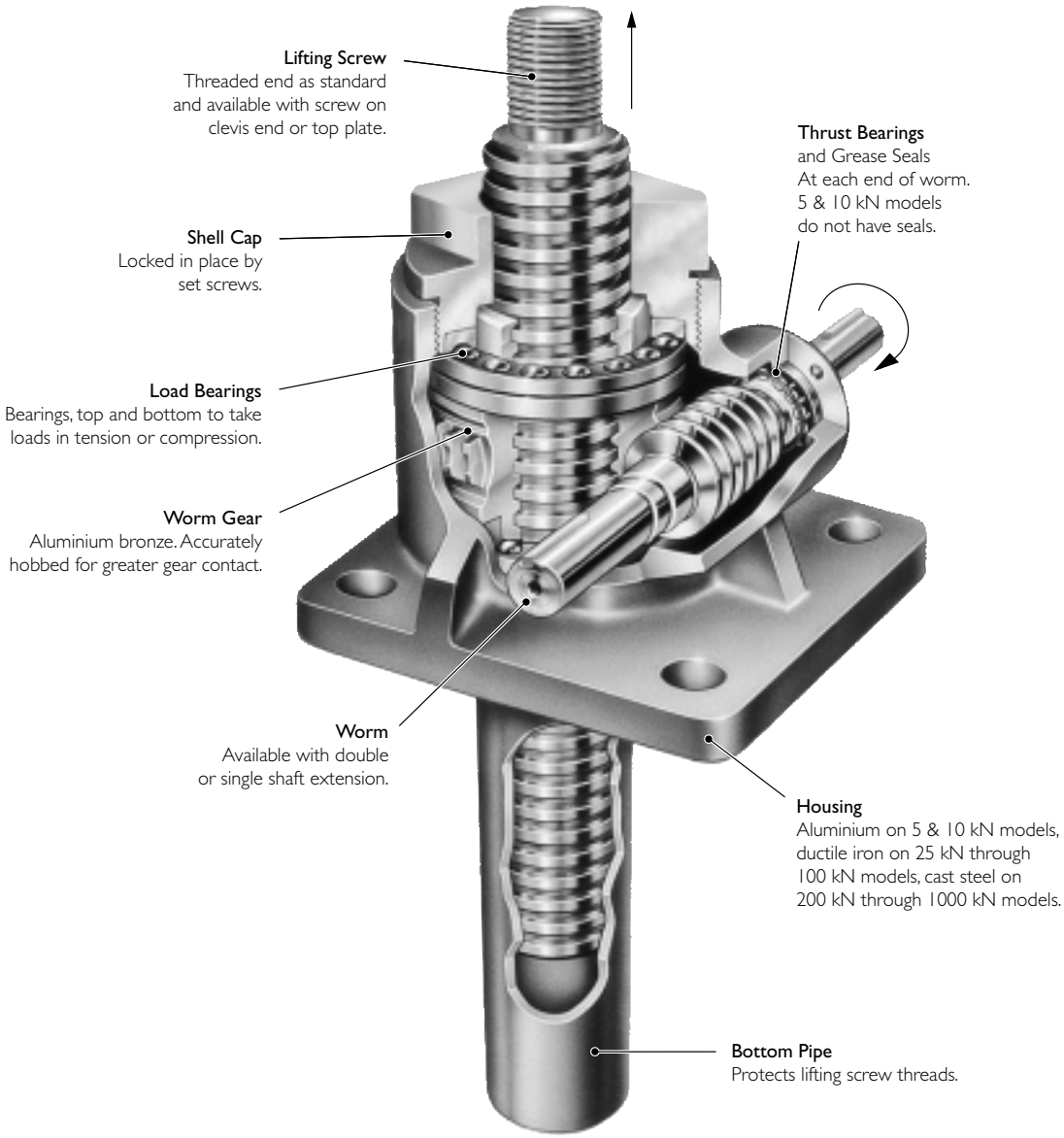

Capacities from 5 kN to 1000 kN
Worm Gear Ratios from 5:1 to 36:1

The Metric machine screw actuator range is produced in many standard models with a wide range of capabilities, there is a standard model for almost any requirement.

Operated manually or by motor units metric actuator models can be used singly, in tandem or in multiple arrangements (refer 1.1.3.2.9.). Since most capacities have a uniform lifting speed, added economy can be realised in raising unevenly distributed loads by operating the different capacities in unison.

Most Metric machine screw actuator models with higher ratios are self-locking and will hold heavy loads in position indefinitely without creep, in ideal conditions. They can be used to push, pull, apply pressure and as linear actuators. They are furnished with standard raises in increments of 25 mm. Depending upon size and type of load, models are available with raises up to 6 metres.

More Than 5000 Standard Combinations

Features

- **Precise Positioning** - Can be controlled accurately for positioning within hundredths of a millimetre.
- **Self-Locking** - Will normally hold loads in position without creeping when using the higher ratio units, as long as the actuator unit is not subject to vibration or cyclic temperature variation. If self-locking is critical a brake motor or other restraining device should be considered.
- **Uniform Lifting Speed** - Since many models have the same gear ratios, various capacities can be used in the same application to lift unevenly distributed loads with uniform speed.
- **Quick, Sure Operation** - Designed and built to be positive acting, for accurate response to motive power.

Options

- Two Standard Gear Ratios
- **Anti-Backlash Option** - Reduces vertical backlash between the screw and the worm gear nut to a practical minimum for smooth, precise operation and minimum wear.
- **Keyed Option** - Stops a translating screw from rotating when the screw ends are free.
- **Secondary Guide Option** - Increases lifting screw lateral rigidity aiding screw guidance and improved side load resilience.
- **Bellows Boot Option** - Protects the screw from dust, dirt, moisture and corrosive contaminants.

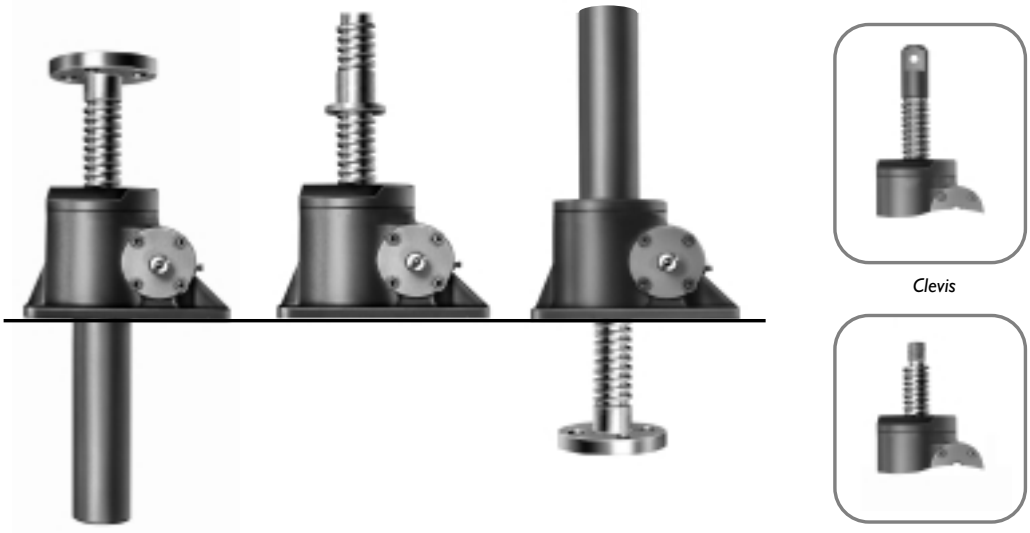

Clevis

Upright Screw | *Rotating Screw (Upright)* *Available in both upright and inverted types* | *Inverted Screw* | *Threaded*

Note *Clockwise rotation of worm raises load on all models (refer to previous page) - counter clockwise available at extra charge.*
Unless a translating lifting screw is keyed, the top should be bolted to the lifting member to prevent the screw from rotating.
Actuators are equipped with "Alemite" grease fittings.
Recommended lubricants are listed in the installation and maintenance instructions.
Actuators supplied complete with drive shaft keys.

Attachments

IEC and Nema C-Face flanges, motors, gear boxes, reducers and couplings available for single actuator drive or multiple actuator arrangements (refer 4, 5, 6, 7 and 8).

Motion control components include motor drives, Motion Controllers with operator interfaces, encoders, limit switches, potentiometers and meters with LCD display (refer 8.).

1.2.2.1. Performance of Standard Metric Actuators

Actuator Model		E2625	E2501	E1802	E1805	E1810	E1820	E1830	E1850	E18100
Capacity (kN)		5	10	25	50	100	200	300	500	1000
Lifting Screw *	Diameter	16 mm	20 mm	30 mm	40 mm	55 mm	65 mm	95 mm	120 mm	160 mm
	Pitch	3 mm	5 mm	6 mm	9 mm	12 mm	12 mm	16 mm	16 mm	20 mm
Worm Gear Ratios	Standard	5:1	5:1	6:1	6:1	8:1	8:1	10 2/3	10 2/3	12:1
	Optional	20:1	20:1	24:1	24:1	24:1	24:1	32:1	32:1	36:1
Turn of worm for raise of lifting screw	Standard	5 for 3 mm	1 for 1 mm	1 for 1 mm	1 for 1.5 mm	1 for 1.5 mm	1 for 1.5 mm	1 for 1.5 mm	1 for 1.5 mm	3 for 5 mm
	Optional	20 for 3 mm	4 for 1 mm	4 for 1 mm	4 for 1.5 mm	2 for 1 mm	2 for 1 mm	2 for 1 mm	2 for 1 mm	9 for 5 mm
Maximum Input Power per Actuator (kW)	Standard	0.25	0.375	1.5	3	3.75	3.75	6	11.25	18.5
	Optional	0.12	0.19	0.375	0.55	1.125	1.125	1.9	4.5	8.25
Start-Up Torque at full load (Nm) †	Standard	2.5	6.8	19.8	56.0	115.9	263.8	480	904	2025
	Optional	1.1	3.0	8.7	25.5	60.5	137	284	504	1119
Weight with base raise of 150mm (kg)		1.03	2.27	8.17	15.88	24.72	45	86	195	553
Weight for each additional 25mm raise (kg)		0.073	0.13	0.21	0.32	0.57	0.86	1.58	2.49	4.31

* *All metric machine screws have a trapezoidal thread form, single start as standard.*

† *For loads of 25% to 100% of actuator capacity, torque requirements are approximately proportional to the load.*

Metric Actuator Efficiencies

Standard Gear Ratio

Actuator Model	E2625	E2501	E1802	E1805	E1810	E1820	E1830	E1850	E18100
Gear Ratio	5	5	6	6	8	8	10 2/3	10 2/3	12
Actuator Static Efficiency	0.189	0.233	0.201	0.213	0.206	0.181	0.149	0.132	0.131
Actuator Dynamic Efficiency	0.252	0.306	0.264	0.281	0.272	0.242	0.205	0.181	0.178

Optional Gear Ratio

Actuator Model	E2625	E2501	E1802	E1805	E1810	E1820	E1830	E1850	E18100
Gear Ratio	20	20	24	24	24	24	32	32	36
Actuator Static Efficiency	0.107	0.130	0.115	0.117	0.132	0.116	0.084	0.079	0.079
Actuator Dynamic Efficiency	0.160	0.194	0.167	0.172	0.190	0.169	0.128	0.120	0.123

Note *Efficiency values for standard grease lubricated worm gear box and lifting screw.*

1.2.2.2. Standard Metric Translating Screw Actuators

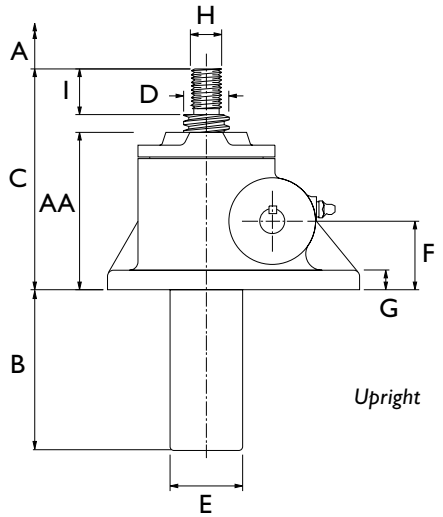

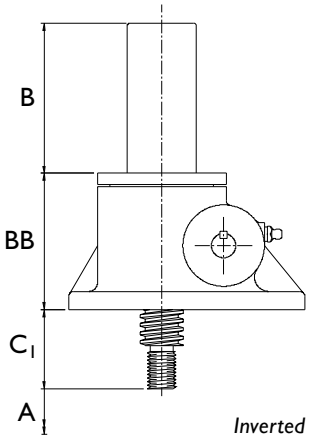

Note *All Dimensions in mm.*

Plan View

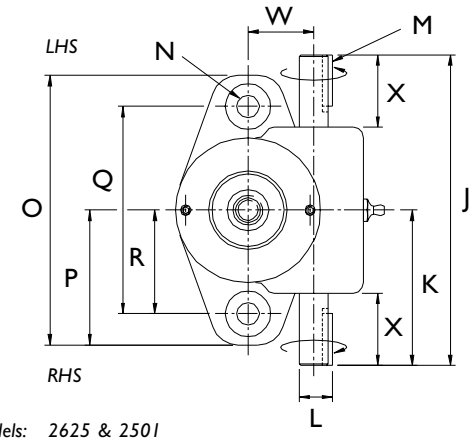

Models: 2625 & 2501

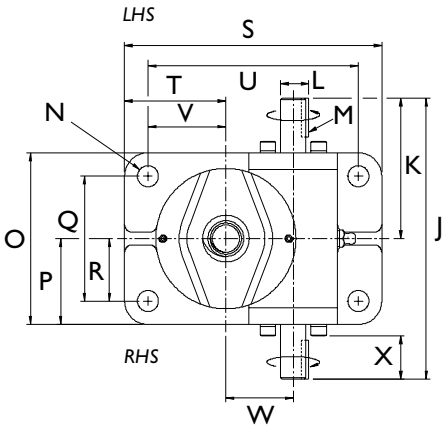

Models: 1802 1805 1810 1820 1830 1850

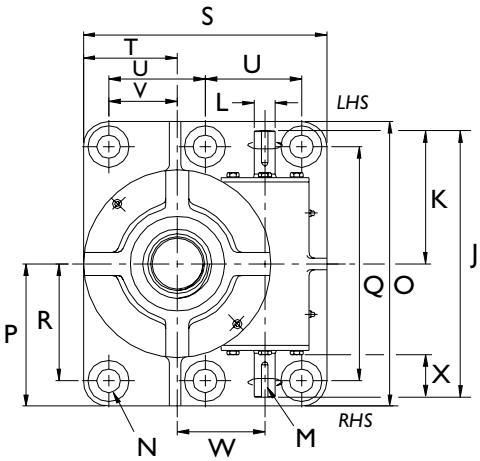

Models: 18100

Note *1. Closed Height of threaded end and top plate units is the same for upright or inverted models.*
2. Dimensions are subject to change without notice.
3. LHS = Left Hand Side
4. RHS = Right Hand Side

Model	Upright	E2625	E2501	E1802	E1805	E1810	E1820	E1830	E1850	E18100
	Inverted	E2624	E2500	E1801	E1804	E1809	E1819	E1829	E1849	E18099
Capacity (kN)		5	10	25	50	100	200	300	500	1000
A		Raise As Required								
B		A + 9	A + 9 (A+10)	A + 5	A - 5	A + 3	A - 1	A + 15	A + 13	A + 3
C		95	125	145	185	200	265	325	390	560
C1		40	45	55	65	80	95	115	150	260
D		16	20	30	40	55	65	95	120	160
E		26.7	33.4	48.3	60.3	73	89	115	141	194
F		26 ± 0.13	40 ± 0.13	45 ± 0.13	60 ± 0.13	60 ± 0.13	85 ± 0.13	105 ± 0.13	120 ± 0.13	150 ± 0.13
G		10	10	13	14	16	20	30	32	40
H		M10 X 1.5	M12 X 1.75	M20 X 2.5	M24 X 3	M36 X 4	M48 X 5	M72 X 4	M100 X 4	M125 X 4
I		20	24	30	35	40	55	65	90	125
J		120	150	180	230	280	300	380	460	580
K		60	75	90	115	140	150	190	230	290
L		10h8	14h8	16h8	19h8	25h8	28h8	35h8	40h8	45h8
M		3 X 3 X 18	5 X 5 X 25	5 X 5 X 25	6 X 6 X 32	8 X 7 X 40	8 X 7 X 40	10 X 8 X 50	12 X 8 X 56	14 X 9 X 70
N		9	11	13.5	18	22	26	39	51	51
O		110	130	110	150	190	210	260	300	620
P		55	65	55	75	95	105	130	150	310
Q		85	100	80	115	145	150	190	200	510
R		42.5	50	40	57.5	72.5	75	95	100	255
S		-	-	165	205	225	275	365	535	530
T		-	-	65	75	75	105	140	225	205
U		-	-	135	170	180	215	295	435	210
V		-	-	50	57.5	52.5	75	105	175	150
W		23.82 + 0.076 - 0.000	31.75 + 0.076 - 0.000	43.26 + 0.025 - 0.025	55.58 + 0.050 - 0.000	66 + 0.060 - 0.000	66 + 0.070 - 0.000	95.25 + 0.130 - 0.000	135 + 0.070 - 0.000	190.5 + 0.076 - 0.000
X		27	35	27.5	35	44	44	56	66	88
AA		64	90	103.5	138	146.5	195	235	275	405
BB		64	78	95.5	122	130.5	179	235	275	405

1.2.2.3. Standard Translating Screw Ends

Note
1850 & 18100 Models have 6 bolt holes on the Top Plate

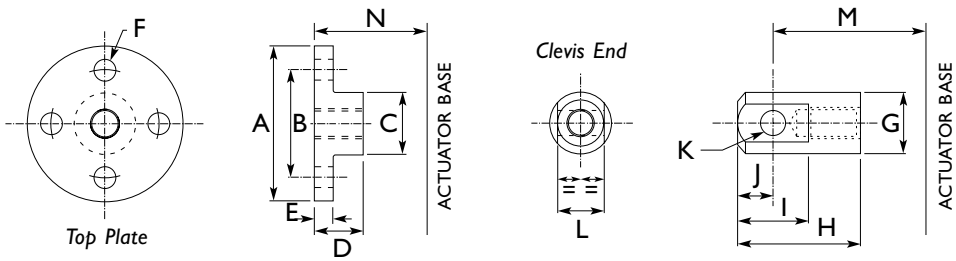

Model		E2625	E2501	E1802	E1805	E1810	E1820	E1830	E1850	E18100
A		Ø65	Ø80	Ø100	Ø120	Ø150	Ø170	Ø240	Ø280	Ø380
B		P.C.D. 45	P.C.D. 55	P.C.D. 70	P.C.D. 85	P.C.D. 110	P.C.D. 120	P.C.D. 170	P.C.D. 215	P.C.D. 290
C		Ø25	Ø30	Ø40	Ø50	Ø65	Ø75	Ø110	Ø150	Ø200
D		21	24	31.5	36.5	42	58	67	92	127
E		8	10	12	16	20	25	30	35	75
F		Ø9	Ø11	Ø13.5	Ø18	Ø22	Ø26	Ø33	Ø33	Ø51
G		Ø25	Ø30	Ø40	Ø50	Ø65	Ø75	Ø110	Ø150	Ø200
H		56	63	79.5	91.5	120	143	167	217	297
I		30	36	46	60	66	80	120	150	210
J		15	18	23	30	33	40	60	75	105
K		Ø10	Ø12	Ø16	Ø20	Ø22	Ø30	Ø45	Ø60	Ø90
L		15	20	30	35	40	50	80	110	140
M	Upright	115	145	170	210	245	310	365	440	625
	Inverted	60	65	80	90	125	140	155	200	325
N	Upright	95	125	145	185	200	265	325	390	560
	Inverted	40	45	55	65	80	95	115	150	260

1.2.2.4. Standard Metric Rotating Screw Actuator

For other dimensions and performance data refer to metric translating actuators. All dimensions in mm.

Upright Rotating Screw

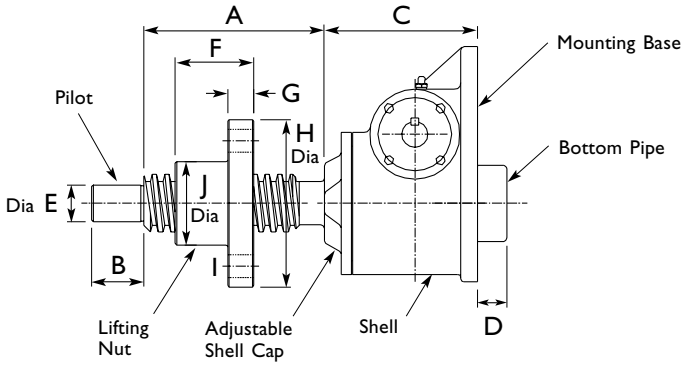

Model Number	Rating (KN)	A	B	C	D	E	F	G	H	I	J
UE-2626	5	Raise + 40	16	64	34	10	25	10	60	4 Holes - 9 Dia. on 42 Dia. P.C.D.	25
UE-2502	10	Raise + 44	16	90	0	12	35	12	80	4 Holes - 11 Dia. on 57 Dia. P.C.D.	35
UE-1803	25	Raise + 60	25	103.5	0	20	40	15	90	4 Holes - 13.5 Dia. on 65 Dia. P.C.D.	40
UE-1806	50	Raise + 80	30	138	0	25	65	20	115	4 Holes - 18 Dia. on 85 Dia. P.C.D.	55
UE-1811	100	Raise + 100	50	146.5	28	35	75	25	160	4 Holes - 22 Dia. on 120 Dia. P.C.D.	80
UE-1821	200	Raise + 100	65	195	24	45	75	25	185	4 Holes - 26 Dia. on 135 Dia. P.C.D.	90
UE-1831	300	Raise + 180	85	235	40	75	140	35	230	6 Holes - 26 Dia. on 175 Dia. P.C.D.	125
UE-1851	500	Raise + 200	100	275	63	90	150	50	280	6 Holes - 33 Dia. on 220 Dia. P.C.D.	160
UE-18101	1000	Raise + 250	125	405	128	125	175	60	380	6 Holes - 45 Dia. on 295 Dia. P.C.D.	210

Inverted Rotating Screw

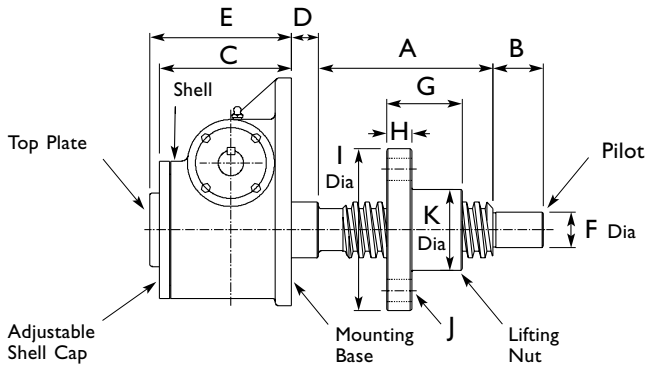

Model Number	Rating (KN)	A	B	C	D	E	F	G	H	I	J	K
DE-2626	5	Raise + 40	16	64	12	64	10	25	10	60	4 Holes - 9 Dia. on 42 Dia. P.C.D.	25
DE-2502	10	Raise + 44	16	90	10	90	12	35	12	80	4 Holes - 11 Dia. on 57 Dia. P.C.D.	35
DE-1803	25	Raise + 60	25	95.5	14	95.5	20	40	15	90	4 Holes - 13.5 Dia. on 65 Dia. P.C.D.	40
DE-1806	50	Raise + 80	30	122	18	122	25	65	20	115	4 Holes - 18 Dia. on 85 Dia. P.C.D.	55
DE-1811	100	Raise + 100	50	130.5	26.5	130.5	35	75	25	160	4 Holes - 22 Dia. on 120 Dia. P.C.D.	80
DE-1821	200	Raise + 100	65	179	25	203	45	75	25	185	4 Holes - 26 Dia. on 135 Dia. P.C.D.	90
DE-1831	300	Raise + 180	85	235	25	275	75	140	35	230	6 Holes - 26 Dia. on 175 Dia. P.C.D.	125
DE-1851	500	Raise + 200	100	275	35	313	90	150	50	280	6 Holes - 33 Dia. on 220 Dia. P.C.D.	160
DE-18101	1000	Raise + 250	125	405	105	458	125	175	60	380	6 Holes - 45 Dia. on 295 Dia. P.C.D.	210

1.2.2.5. Metric Actuators with Anti-Backlash Feature

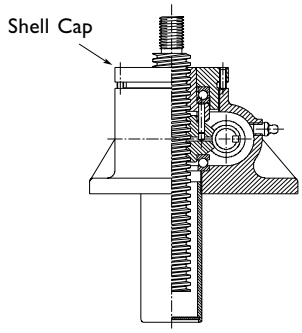

Metric actuators are available with anti-backlash nuts for applications where a reversal of loading from tension to compression is encountered.

Anti-Backlash Features

- Reduction in the vertical backlash between the screw and the worm gear nut to a practical minimum for smoother, more precise operation and minimum wear.
- Acts as a safety device, providing a dual nut load carrying unit, when the worm gear becomes worn.
- Wear indicator for critical applications.

The anti-backlash feature can be maintained by adjusting the shell cap until the desired amount of backlash is achieved. To avoid binding and excessive wear, do not adjust lifting screw backlash to less than 0.013 mm (refer 1.5.2.1.1.7.).

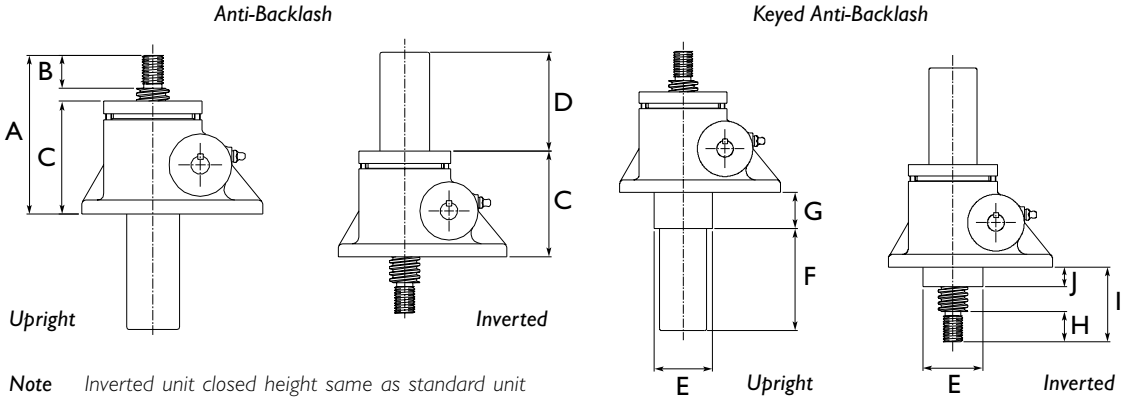

Note *Inverted unit closed height same as standard unit*

Standard Dimensions (mm)

Anti-Backlash					Keyed - Anti-Backlash						
Model	A	B	C	D	Model	E	F	G	H	I	J
4625	95	20	65	Raise + 34	**K4625**	36	Raise + 9	25	20	40	14
4501	125	24	86	Raise + 35	**K4501**	38	Raise + 9	30	24	45	16
4802	145	30	103.5	Raise + 30	**K4802**	60	Raise + 5	37	30	55	19.5
4805	185	35	138	Raise - 5	**K4805**	75	Raise - 5	40	35	65	24
4810	200	40	146.5	Raise + 3	**K4810**	90	Raise + 3	48	40	80	30
4820	265	55	195	Raise + 24	**K4820**	102	Raise + 24	58	55	110	39
4830	340	65	250	Raise + 38	**K4830**	138	Raise + 15	73	65	115	43
4850	415	90	295	Raise + 55	**K4850**	206	Raise + 13	95	90	213	63
48100	585	125	415	Raise + 35	**K48100**	264	Raise + 3	180	125	405	145

Torque and Efficiencies for Standard Anti-Backlash Actuators

Model	Upright	4625	4501	4802	4805	4810	4820	4830	4850	48100
	Inverted	4624	4500	4801	4804	4809	4819	4829	4849	48099
Capacity (kN)		5	10	25	50	100	200	300	500	1000
Start-Up Torque at Full Load (Nm)	Standard	2.9	7.8	23.5	62	129	281	535	1003	2248
	Optional	1.3	3.7	9.8	28	67	153	314	568	1245
Actuator Static Efficiency	Standard	0.164	0.203	0.169	0.192	0.185	0.170	0.134	0.119	0.118
	Optional	0.090	0.109	0.102	0.105	0.119	0.104	0.076	0.070	0.071
Weight with Base Raise of 150mm (kg) approx.		1.48	2.72	8.62	16.78	26.12	48.6	90.5	208.6	609.8

Note *1. For loads from 25% to 100% of actuator capacity, torque requirements are proportional to the load.*
2. Dimensions are subject to change without notice.

1.2.2.5. Metric Actuators with Anti-Backlash Feature

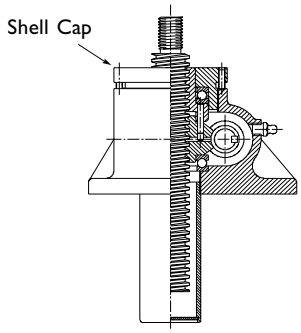

Metric actuators are available with anti-backlash nuts for applications where a reversal of loading from tension to compression is encountered.

Anti-Backlash Features

- Reduction in the vertical backlash between the screw and the worm gear nut to a practical minimum for smoother, more precise operation and minimum wear.
- Acts as a safety device, providing a dual nut load carrying unit, when the worm gear becomes worn.
- Wear indicator for critical applications.

The anti-backlash feature can be maintained by adjusting the shell cap until the desired amount of backlash is achieved. To avoid binding and excessive wear, do not adjust lifting screw backlash to less than 0.013 mm (refer 1.5.2.1.1.7.).

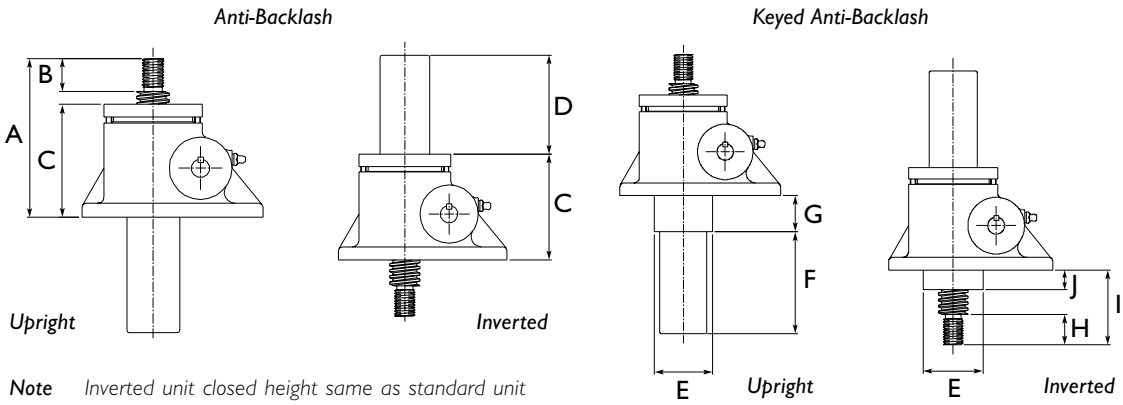

Note *Inverted unit closed height same as standard unit*

Standard Dimensions (mm)

Anti-Backlash					Keyed - Anti-Backlash						
Model	A	B	C	D	Model	E	F	G	H	I	J
E4625	95	20	65	Raise + 34	**KE4625**	36	Raise + 9	25	20	40	14
E4501	125	24	86	Raise + 35	**KE4501**	38	Raise + 9	30	24	45	16
E4802	145	30	103.5	Raise + 30	**KE4802**	60	Raise + 30	37	30	55	19.5
E4805	185	35	138	Raise - 5	**KE4805**	75	Raise + 20	40	35	65	24
E4810	200	40	146.5	Raise + 3	**KE4810**	90	Raise + 3	48	40	80	30
E4820	265	55	195	Raise + 24	**KE4820**	102	Raise + 24	58	55	110	39
E4830	340	65	250	Raise + 38	**KE4830**	138	Raise + 15	73	65	115	43
E4850	415	90	295	Raise + 55	**KE4850**	206	Raise + 13	95	90	213	63
E48100	585	125	415	Raise + 35	**KE48100**	264	Raise + 3	180	125	405	145

Torque and Efficiencies for Standard Anti-Backlash Actuators

Model	Upright	E4625	E4501	E4802	E4805	E4810	E4820	E4830	E4850	E48100
	Inverted	E4624	E4500	E4801	E4804	E4809	E4819	E4829	E4849	E48099
Capacity (kN)		5	10	25	50	100	200	300	500	1000
Start-Up Torque at Full Load (Nm)	Standard	2.9	7.8	23.5	62	129	281	535	1003	2248
	Optional	1.3	3.7	9.8	28	67	153	314	568	1245
Actuator Static Efficiency	Standard	0.164	0.203	0.169	0.192	0.185	0.170	0.134	0.119	0.118
	Optional	0.090	0.109	0.102	0.105	0.119	0.104	0.076	0.070	0.071
Weight with Base Raise of 150mm (kg) approx.		1.48	2.72	8.62	16.78	26.12	48.6	90.5	208.6	609.8

Note *1. For loads from 25% to 100% of actuator capacity, torque requirements are proportional to the load.*
2. Dimensions are subject to change without notice.

1.2.2.6. Keyed Metric Actuators

A Keyed translating screw actuator stops the screw from rotating without the need for end pinning. However the key-way in the screw will cause greater than normal wear on the internal threads of the worm gear.

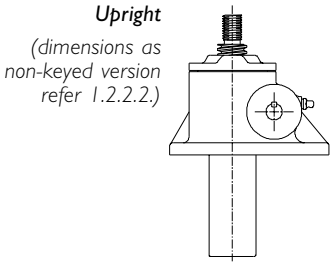

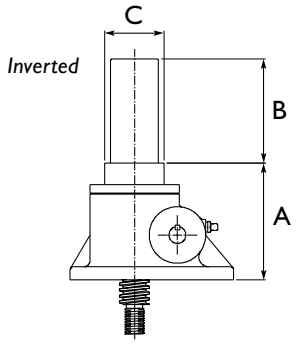

Standard Keyed Dimensions for Inverted Models

Model		E2624	E2500	E1801	E1804	E1809	E1819	E1829	E1849	E1899
Inverted	A	79	78	125.5	159	167.5	210	267	**	**
	B	Raise + 9	Raise + 35	Raise + 30	Raise + 20	Raise + 3	Raise - 1	Raise + 15	**	**
	C	35	N/A	60	75	90	102	141.5	**	**

1.2.2.7. Metric Actuators with Secondary Guide

Secondary Guiding for the screw for greater lateral rigidity aiding screw guidance and improved side load resilience.

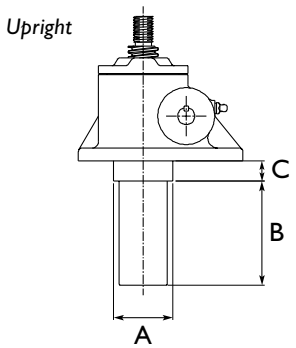

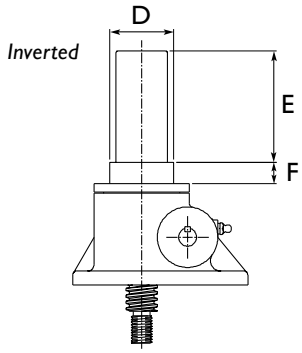

Standard Secondary Guide Dimensions

Model Capacity (kN)		E2625	E2501	E1802	E1805	E1810	E1820	E1830	E1850	E18100
Upright	A	36	38	60	70	90	100	138	155	225
	B	Raise + 34	Raise + 34	Raise + 30	Raise + 20	Raise + 29	Raise + 24	Raise + 40	Raise + 38	Raise + 50
	C	16	20	20	18	20	20	38	38	65
Inverted	D	36	**	60	70	90	100	138	155	**
	E	Raise + 34	Raise + 34	Raise + 30	Raise + 20	Raise + 29	Raise + 24	Raise + 40	Raise + 38	**
	F	16	**	20	18	20	20	38	38	**

** *Consult Power Jacks Ltd*

Note 1. *All dimensions in mm.*
2. *Dimensions are subject to change without notice.*

1.2.2.8. Metric Machine Screw Actuators with Bellows Boots

1.2.2.8.1. Bellows Boots for Metric Actuators

Features

- Protects the screw from dust and dirt.
- Guards against moisture and corrosive contaminants.
- Helps maintain the proper lubrication.
- Boots are made of P.V.C. coated nylon with sewn construction. Other materials are available for applications involving high temperatures, highly corrosive atmospheres and other special conditions.

1.2.2.8.1.1. Boot Dimensions

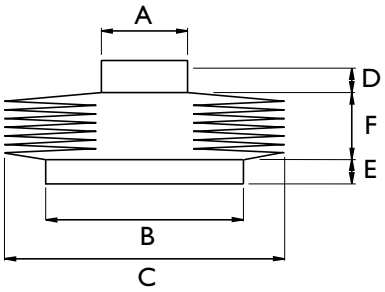

Model	A	B	C	D	E
E2625-B	25	60	100	13	13
E2501-B	30	70	110	15	15
E1802-B	40	90	120	15	23
E1805-B	50	115	140	15	31
E1810-B	65	136	150	15	31
E1820-B	75	165	165	20	20
E1830-B	110	220	191	20	20
E1850-B	150	285	210	20	45
E18100-B	200	220	244	20	20

	Model	E2625-B	E2501-B	E1802-B	E1805-B	E1810-B	E1820-B	E1830-B	E1850-B	E18100-B
F	Raise 0 → 150	10	-	-	-	-	-	-	-	-
	Raise 0 → 300	20	20	20	20	20	20	20	20	20
	Raise 300 → 600	30	35	30	30	30	30	30	30	30
	Raise 600 → 750	-	40	-	-	-	-	-	-	-
	Raise 600 → 900	-	-	-	45	-	-	-	-	-
	Raise 750 → 1000	-	60	-	-	-	-	-	-	-
	Raise 600 → 1050	-	-	50	-	50	50	50	50	50
	Raise 900 → 1050	-	-	-	50	-	-	-	-	-
	Raise 1000 → 1250	-	60†	-	-	-	-	-	-	-
	Raise 1050 → 1500	-	-	70	70	70	70	70	70	70
	Raise 1500 → 1800	-	-	100†	95	-	90†	100†	-	-
	Raise 1500 → 2000	-	-	-	-	105	-	-	-	-
	Raise 1800 → 2100	-	-	-	110†	-	110†	-	-	-
	Raise 2000 → 2500	-	-	-	-	120†	-	-	-	-
	Raise 2100 → 2500	-	-	-	130†	-	-	-	-	-
	Raise 2500 → 3000	-	-	-	160†	-	-	-	-	-

Note *1. F = Bellows boot minimum closed thickness.*
2. - = Not applicable.
3. † = Control tapes fitted (approximately 20 mm increase to outer diameter).

1.2.2.8.2. Bellows Boots for Metric Actuators

Closed Heights

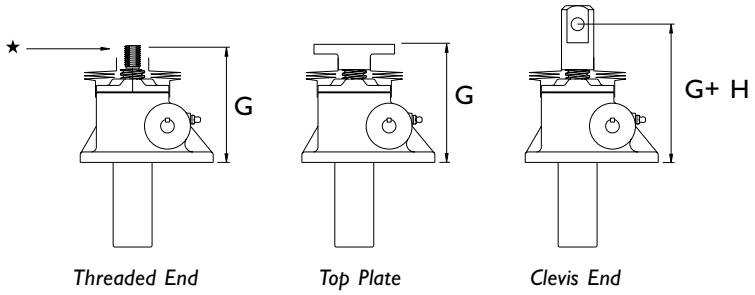

1.2.2.8.2.1. Standard Dimensions for all Upright Metric Actuators including Keyed

	Model	E2625-B	E2501-B	E1802-B	E1805-B	E1810-B	E1820-B	E1830-B	E1850-B	E18100-B
G	Raise 0 → 150	100	-	-	-	-	-	-	-	-
	Raise 0 → 300	110	140	160	200	215	280	330	390	560
	Raise 300 → 600	120	155	170	210	225	290	340	400	565
	Raise 600 → 750	-	160	-	-	-	-	-	-	-
	Raise 600 → 900	-	-	-	225	-	-	-	-	-
	Raise 750 → 1000	-	180	-	-	-	-	-	-	-
	Raise 600 → 1050	-	-	190	-	245	310	360	420	585
	Raise 900 → 1050	-	-	-	230	-	-	-	-	-
	Raise 1000 → 1250	-	180 †	-	-	-	-	-	-	-
	Raise 1050 → 1500	-	-	210	250	265	330	380	440	605
	Raise 1500 → 1800	-	-	240 †	275	-	350 †	410 †	-	-
	Raise 1500 → 2000	-	-	-	-	300	-	-	-	-
	Raise 1800 → 2100	-	-	-	290 †	-	370 †	-	-	-
	Raise 2000 → 2500	-	-	-	-	315 †	-	-	-	-
	Raise 2100 → 2500	-	-	-	310 †	-	-	-	-	-
	Raise 2500 → 3000	-	-	-	340 †	-	-	-	-	-
H	Extra Closed Height for Clevis	20	20	25	25	45	45	40	50	65

1.2.2.8.2.2. Standard Dimensions for all Upright Metric Anti-Backlash Actuators including Keyed

	Model	E4625-B	E4501-B	E4802-B	E4805-B	E4810-B	E4820-B	E4830-B	E4850-B	E48100-B
G	Raise 0 → 150	105	-	-	-	-	-	-	-	-
	Raise 0 → 300	115	140	160	200	215	280	345	415	585
	Raise 300 → 600	120	155	170	210	225	290	355	425	585
	Raise 600 → 750	-	160	-	-	-	-	-	-	-
	Raise 600 → 900	-	-	-	225	-	-	-	-	-
	Raise 750 → 1000	-	180	-	-	-	-	-	-	-
	Raise 600 → 1050	-	-	190	-	245	310	375	445	600
	Raise 900 → 1050	-	-	-	230	-	-	-	-	-
	Raise 1000 → 1250	-	180 †	-	-	-	-	-	-	-
	Raise 1050 → 1500	-	-	210	250	265	330	395	465	620
	Raise 1500 → 1800	-	-	240 †	275	-	350 †	425 †	-	-
	Raise 1500 → 2000	-	-	-	-	300	-	-	-	-
	Raise 1800 → 2100	-	-	-	290 †	-	370 †	-	-	-
	Raise 2000 → 2500	-	-	-	-	315 †	-	-	-	-
	Raise 2100 → 2500	-	-	-	310 †	-	-	-	-	-
	Raise 2500 → 3000	-	-	-	340 †	-	-	-	-	-
H	Extra Closed Height for Clevis	20	20	25	25	45	45	40	50	65

1.2.2.8.3. Inverted Metric Actuators with Bellows Boots

Applies to all inverted Metric actuators including Anti-Backlash and Keyed.

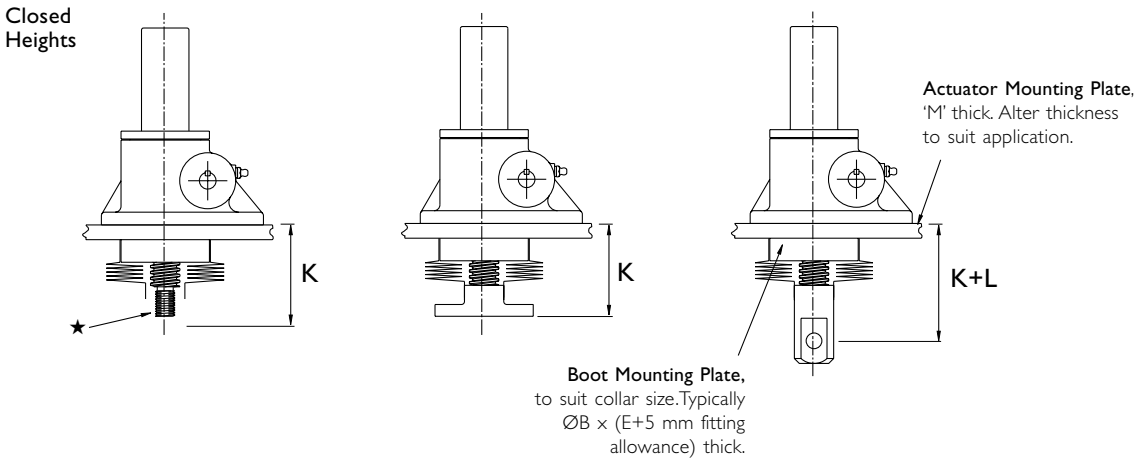

	Model	E2624-B	E2500-B	E1801-B	E1804-B	E1809-B	E1819-B	E1829-B	E1849-B	E18099-B
M	Mounting Plate	10	10	15	15	20	20	30	30	50
K	Raise 0 → 150	70	-	-	-	-	-	-	-	-
	Raise 0 → 300	80	85	105	120	130	135	165	215	260
	Raise 300 → 600	90	100	115	130	140	145	175	225	260
	Raise 600 → 750	-	105	-	-	-	-	-	-	-
	Raise 600 → 900	-	-	-	145	-	-	-	-	-
	Raise 750 → 1000	-	125	-	-	-	-	-	-	-
	Raise 600 → 1050	-	-	135	-	160	165	195	245	280
	Raise 900 → 1050	-	-	-	150	-	-	-	-	-
	Raise 1000 → 1250	-	125 †	-	-	-	-	-	-	-
	Raise 1050 → 1500	-	-	155	170	180	185	215	265	300
	Raise 1500 → 1800	-	-	185 †	195	-	205 †	245 †	-	-
	Raise 1500 → 2000	-	-	-	-	215	-	-	-	-
	Raise 1800 → 2100	-	-	-	210 †	-	225 †	-	-	-
	Raise 2000 → 2500	-	-	-	-	230 †	-	-	-	-
	Raise 2100 → 2500	-	-	-	230 †	-	-	-	-	-
	Raise 2500 → 3000	-	-	-	260 †	-	-	-	-	-
L	Extra Closed Height for Clevis	20	20	25	25	45	45	40	50	65
P	Extra Closed Height for Keyed Anti-Backlash Units	4	6	4.5	9	10	19	13	33	115

1.2.2.8.4. Notes for all Metric Actuators with Bellows Boots

Note

1. *Supplied complete with a set of corrosion-resistant 'jubilee' clips (2) suitable for fitting over collar diameters.*
2. *† Control tapes are fitted (approximately 20 mm increase to outer diameter).*
3. *For horizontal installation exceeding 450 mm of travel, internal boot guides are recommended.*
4. *Customers with threaded end actuators must provide a fixing for the unattached collar (★).*
5. *Bellows boots for Rotating Screw Actuators consult Power Jacks Ltd.*
6. *For other sizes, raises, and materials please consult Power Jacks Ltd.*
7. *All dimensions in millimetres unless otherwise stated.*
8. *Dimensions subject to change without notice.*

1.2.2.9. Standard Flange Bolt Configuration for Worm Shafts

Configuration A

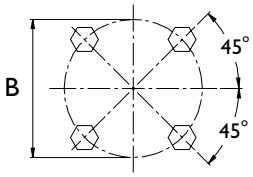

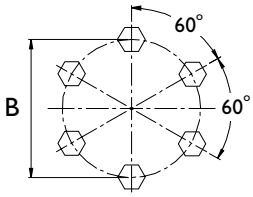

Configuration B

Model	'B' Bolt P.C.D. (mm)	Bolt Information	Configuration
E2625	N/A	N/A	N/A
E2501	N/A	N/A	N/A
E1802	46	M6 X 1 mm Pitch, 14 mm Deep	A
E1805	61	M8 X 1.25 mm Pitch, 22 mm Deep	A
E1810	70	M8 X 1.25 mm Pitch, 14 mm Deep	A
E1820	88	M10 X 1.5 mm Pitch, 14 mm Deep	A
E1830	107	M10 X 1.5 mm Pitch, 19 mm Deep	A
E1850	135	M16 X 2 mm Pitch, 25 mm Deep	A
E18100	160	M16 X 2 mm Pitch, 28 mm Deep	B

1.2.2.10. Metric Double Clevis End Actuators

Note *For other performance and dimension information refer to translating screw models.*

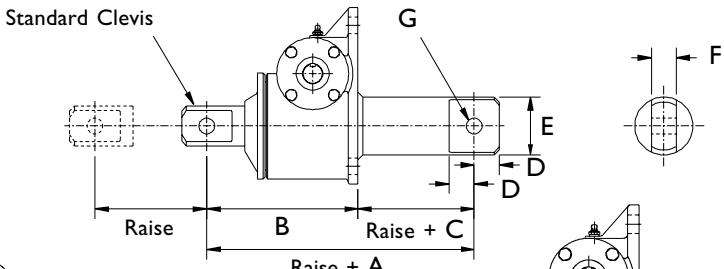

Style 1

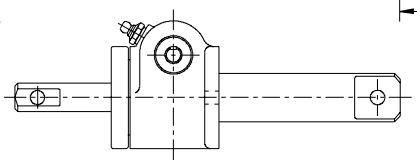

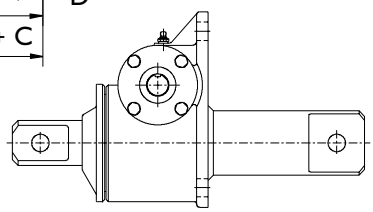

Style 2

Model	CCE 2625	CCE 2501	CCE 1802	CCE 1805	CCE 1810	CCE 1820	CCE 1830	CCE 1850
Capacity (kN)	5	10	25	50	100	200	300	500
Style	1	1	2	2	2	2	2	2
A	150	180	213	260	352	428	492	570
B	115	145	170	210	247	313	367	440
C	35	35	43	50	105	115	125	130
D	15	20	23	30	33	40	60	75
E	26.7	33.4	48.3	60.3	73	102	141	168
F	15	20	30	35	40	50	80	110
G	10	12	16	20	22	30	45	60
Max Raise at Rated Load (Compression)	220	175	352	420	593	592	1338	1920

Note 1. *All dimensions in millimetres unless otherwise stated.*
2. *Dimensions subject to change without notice.*

1.2.2.11. Motor Adaptors for Metric Actuators

- Standard adaptors for 25 kN - 300 kN metric machine screw and ball screw actuators.
- Designed for standard IEC frame sizes.
- Allows direct motor coupling on either side of the actuator input shaft.
- Complete with drive coupling and mounting hardware.
- NEMA frame size versions available on request.
- Adaptors for other Metric actuators and mounting arrangements available on request.
- Adaptors for Imperial actuators available on request.

Note *When direct coupling a motor to an actuator, it is necessary to match motor power to actuator load so the motor does not exceed the maximum actuator power.*

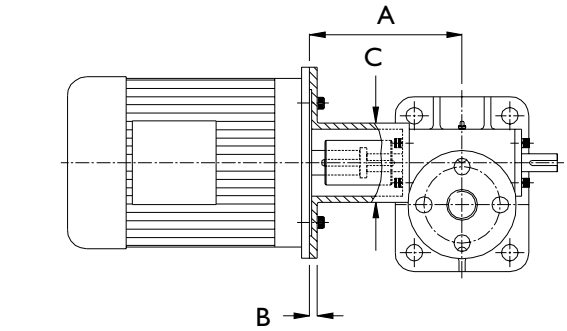

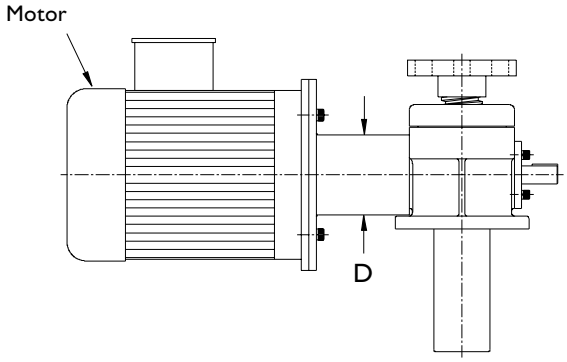

Motor Adaptors		Actuator Rating (kN)																					
		25				50				100					200					300			
Frame Size	Motor Mounting	Std. Part	A	B	C (squ.)	Std Part	A	B	C (squ.)	Std Part	A	B	C	D	Std. Part	A	B	C	D	Std. Part	A	B	C (squ.)
71	B5	✔	145	14	80	✗	-	-	-	✗	-	-	-	-	✗	-	-	-	-	✗	-	-	-
	B14 C105	✗	-	-	-	✗	-	-	-	✗	-	-	-	-	✗	-	-	-	-	✗	-	-	-
80	B5	✔	160	14	80	✔	187	14	100	✗	-	-	-	-	✗	-	-	-	-	✗	-	-	-
	B14 C120	✔	145	14	80	✗	-	-	-	✗	-	-	-	-	✗	-	-	-	-	✗	-	-	-
90	B5	✔	160	14	80	✔	187	14	100	✔	212	14	110	98	✔	212	14	110	98	✔	250	14	120
	B14 C140	✔	145	14	80	✗	-	-	-	✔	212	14	110	98	✔	212	14	110	98	✔	260	14	120
100	B5	✔	160	14	80	✔	207	14	100	✔	212	14	110	98	✔	212	14	110	98	✔	280	14	120
	B14 C160	✔	160	14	80	✔	187	14	100	✔	212	14	110	98	✔	212	14	110	98	✔	260	14	120
112	B5	✗	-	-	-	✔	207	14	100	✔	212	14	110	98	✔	212	14	110	98	✔	280	14	120
	B14 C190	✗	-	-	-	✔	187	14	100	✔	212	14	110	98	✔	212	14	110	98	✔	260	14	120
132	B5	✗	-	-	-	✔	207	14	100	✗	-	-	-	-	✗	-	-	-	-	✔	280	14	120
	B14 C200	✗	-	-	-	✔	207	14	100	✔	232	14	110	98	✔	232	14	110	98	✔	280	14	120

1.2.2.12. Trunnion Mounts for Metric Actuators

5 & 10 kN Models

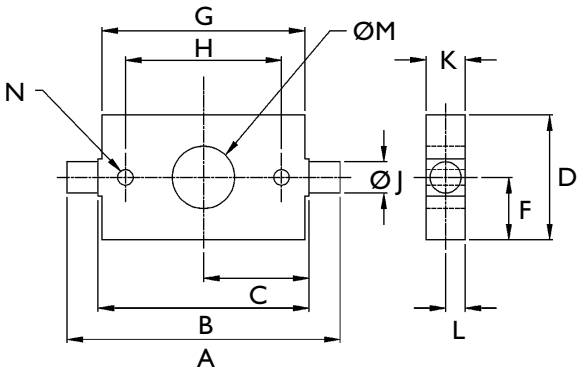

25, 50 & 100 kN Models

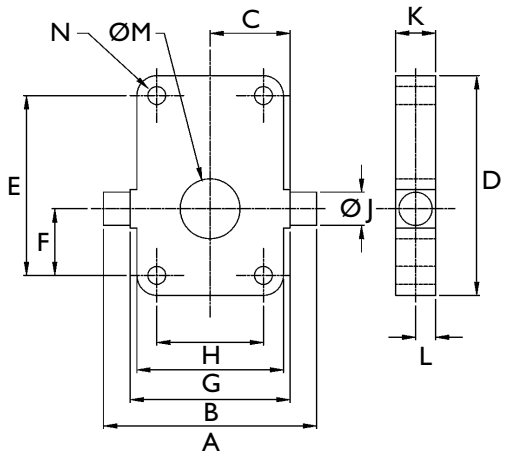

Actuator Rating (kN)	A	B	C	D	E	F	G	H	J (h6)	K	L	M	N	Weight (kG)
5	114	114	57	60	-	30	110	85	15	20	10	50	M8 (2)	1.24
10	175	135	67.5	80	-	40	130	100	20	25	12.5	58	M10 (2)	2.27
25	160	120	60	165	135	50	110	80	25	30	15	72	M12 (4)	3.27
50	200	160	80	205	170	57.5	150	115	35	40	20	95	M16 (4)	8.90
100	270	200	100	225	180	52.5	190	145	45	50	25	130	M20(4)	15.57

Trunnion mounts bolt onto actuator base plates.

Note: *1. Trunnion mounts for other actuator sizes are available on request.*
2. All dimensions in millimetres (mm) unless otherwise stated.
3. Dimensions subject to change without notice.

Example diagram of actuator with trunnion mount fitted

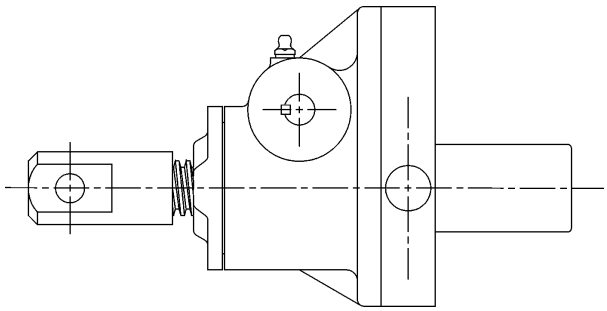

1.2.2.13. RLS-51 Rotary Limit Switch Adaptors for Metric Actuators

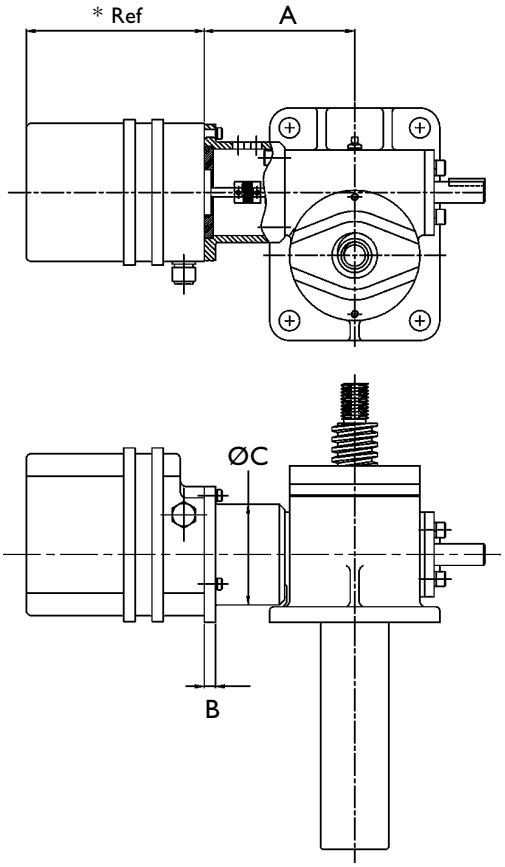

Rotary limit switches can be used as end of travel limit switches with the option of intermediate switches as well. These units are mounted onto a screw jacks free worm shaft and offer an alternative where bottom pipe mounted limit switches are not possible e.g. rotating screw jacks. Up to 8 limit switches can be accommodated in one unit.

For full details on the RLS-51 limit switch refer to section 8.1.1.

Metric Actuator Rating (kN)								
	25				50			
Adaptor Mounting	Std Part	A	B	C (squ)	Std Part	A	B	C (squ)
B5	✗	-	-	-	✗	-	-	-
B14	✔	117	10	70	✔	133	10	89

Metric Actuator Rating (kN)								
	100				200			
Adaptor Mounting	Std Part	A	B	C (squ)	Std Part	A	B	C (squ)
B5	✔	152	13	98	✔	174	13	125
B14	✗	-	-	-	✗	-	-	-

The mounting kit includes the flexible coupling and drive adaptor.

Note 1. *All dimensions are in millimetres (mm) unless otherwise stated.*
2. *Dimensions are subject to change without notice.*

1.2.1.14. SKA Rotary Limit Switch Adaptors for Metric Actuators

The SKA rotary limit switch is a compact 2-position limit switch designed for screw jack and linear actuator applications. For full details on the SKA limit switch refer to section 8.1.2.

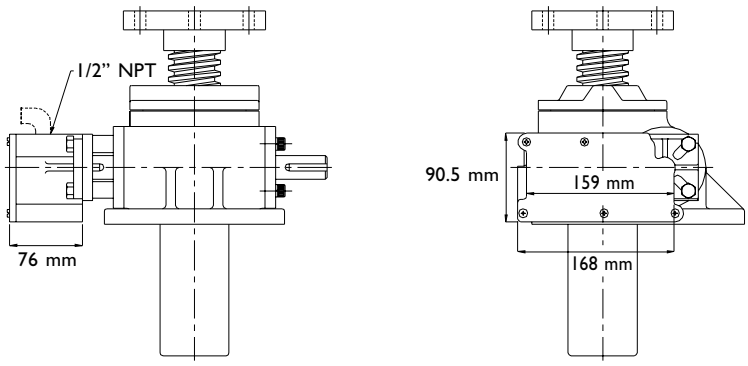

Actuator Mounted

Note 1. *All dimensions are in millimetres (mm) unless otherwise stated.*
2. *Dimensions are subject to change without notice.*

1.2.2.14.1. Mounting and Adjustment Specifications for SKA Rotary Limit Switches

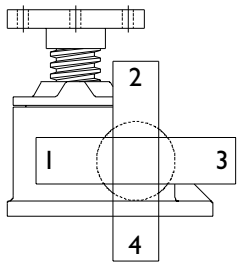

Position Number of Switch

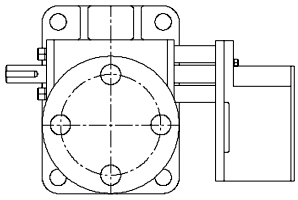

Typical top view showing switch mounted on RH worm extension

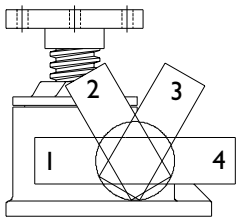

1000 kN metric; 75, 100 & 150 Tons Imperial models only

Actuator	Extended Mount								Closed Mount							
Capacity (kN)	RH				LH				RH				LH			
	1	2	3	4	1	2	3	4	1	2	3	4	1	2	3	4
25	C	A & B	B & D	C	B & D	A & B	C	C	-	-	-	-	-	-	-	-
50	✔	A	D	C	D	A	✔	C	✔	A & B	D	-	D	A & B	✔	-
100	✔	A	D	C	D	A	✔	C	✔	A & B	D	-	D	A & B	✔	-
200	✔	A	✔	C	✔	A	✔	C	✔	A & B	✔	-	✔	A & B	✔	-
300	✔	✔	✔	C	✔	✔	✔	C	✔	B	✔	-	✔	A & B	✔	-
500	✔	✔	✔	C	✔	✔	✔	C	-	✔	✔	-	✔	B	✔	-
1000	✔	✔	✔	✔	✔	✔	✔	C	-	-	✔	✔	-	-	✔	✔

Note *(A) Special Closed Height. (B) Boot Interference Unit. (C) Rotary Limit Switch extends below base of Actuator Unit. (D) Sealed electric elbow would extend below base of Actuator Unit. (✔) Recommended. (-) Not Recommended*
Extended Mount is Standard.

1.2.2.14.2. SKA Limit Switch Field Installation Dimensions

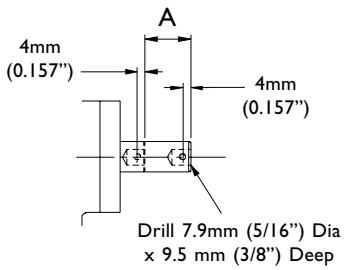

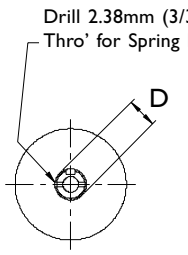

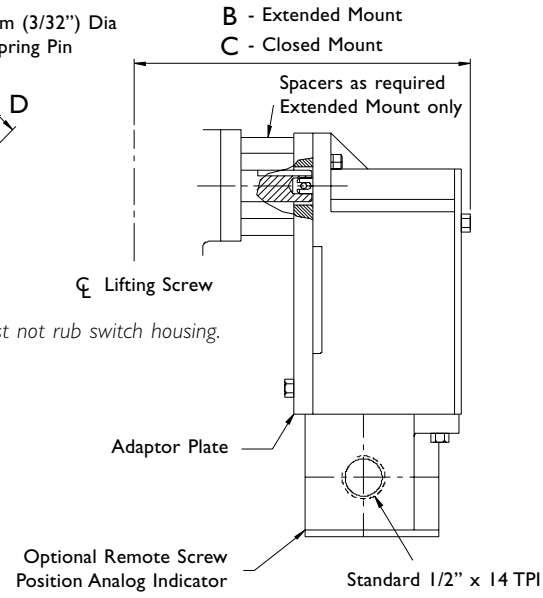

Note: *Shim out on limit switch if necessary worm shaft end must not rub switch housing. Dimensions subject to change without notice.*

Model (kN)	A Cut-off Closed Mount (mm)	B Extended Mount (mm)	C Closed Mount (mm)	D Worm Shaft Dia. (mm)
25	-	172.5	-	16
50	35	198.5	163.5	19
100	44.2	223.4	179.2	25
200	38.5	233.5	195	28
300	51	273.5	222.5	35
500	61	313	252	40
1000	83.5	373.5	290	45

Note
1. *All dimensions are in millimetres (mm) unless otherwise stated.*
2. *Dimensions are subject to change without notice.*

1.2.2.15. Encoder Adaptors for Metric Machine Screw Actuators

Both incremental and absolute encoders can be mounted on a Metric actuators free worm shaft. The specification for these encoders is given in section 8.3. For mounting details please consult Power Jacks Ltd.

1.2.2.16. Limit Switches Mounted on Metric Actuator Bottom Pipe

1.2.2.16.1. Metric Actuator with End of Travel Proximity Sensors

Sensor Kit

- Inductive Proximity Sensors as standard other available on request.
- No contact, so no wearing parts.
- 2 Wire sensor for either Normally Closed (NC) or Normally Open (NO) switching.
- Sensor has rugged one-piece Metal housing.
- Optical setting aid with 2 LED Colour settings:- Red LED indicates just in sensing range. Yellow LED only indicates within 80% safe sensing range.
- M12 Plug in connection for fast change-ability.
- M12 sockets available straight or angled with 5-m cable (other cable lengths available on request).
- Full 360° visibility for switching with 4 yellow LED's at 90° offset.
- Sensor kit includes - sensor, mounting ring, target ring and modification to actuators bottom pipe.
- For full sensor details refer to section 8.2.1.

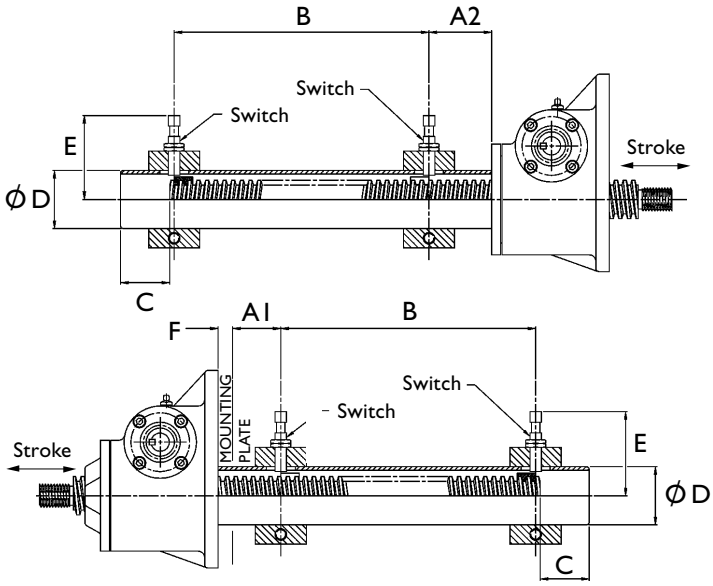

Metric Upright & Inverted Actuators									
Actuator Rating (kN)	Switch Dia (mm)	A1 (mm)	A2 (mm)	B (mm)	C (mm)	D (Ø mm)	E (mm) ±5	F (mm)	Switch Adjustment (mm)
25	12	50	40	Stroke +15	40	48	83	15	±10
50	12	50	40	Stroke +18	40	60	90	15	±10
100	18	50	40	Stroke +24	45	73	103	20	±10
200	18	50	40	Stroke +24	45	89	110	20	±10

Note 1. *All dimensions in mm unless otherwise stated.*
2. *Dimensions subject to change without notice.*
3. *Other metric actuator sizes are available with bottom pipe limit switches. Consult Power Jacks Ltd for advice.*

1.2.2.16.2. Metric Actuator with End of Travel Electro-Mechanical Switches

The actuators can be fitted with electro-mechanical limit switches in a similar design. For dimensions please consult Power Jacks Ltd. For limit switch details refer to section 8.2.2. and 8.2.3.

1.2.2.17. Metric Machine Screw Actuators with Safety Nuts

Power Jacks metric machine screw actuators can be fitted with a safety nut, which provides 2 safety roles:

1. In the event of excessive wear on the nut thread the load will be transferred from the standard nut to the safety nut. This will also provide visual wear indication as the gap between the safety nut decreases to zero as the standard lifting nut wears.
2. In the unlikely event of catostrophic nut thread failure the safety nut will sustain the load. The safety of industrial and human cargo is therefore improved.

There are several configurations for each safety nut device as they only work in one load direction. For this reason when ordering please supply a sketch of your application showing load directions.

1.2.2.18. Translating Metric Actuators with Safety Nuts

Translating Metric Actuators with safety nuts are similar in format to the anti-backlash units. Consult Power Jacks for details.

1.2.2.19. Rotating Metric Actuators with Safety Nuts

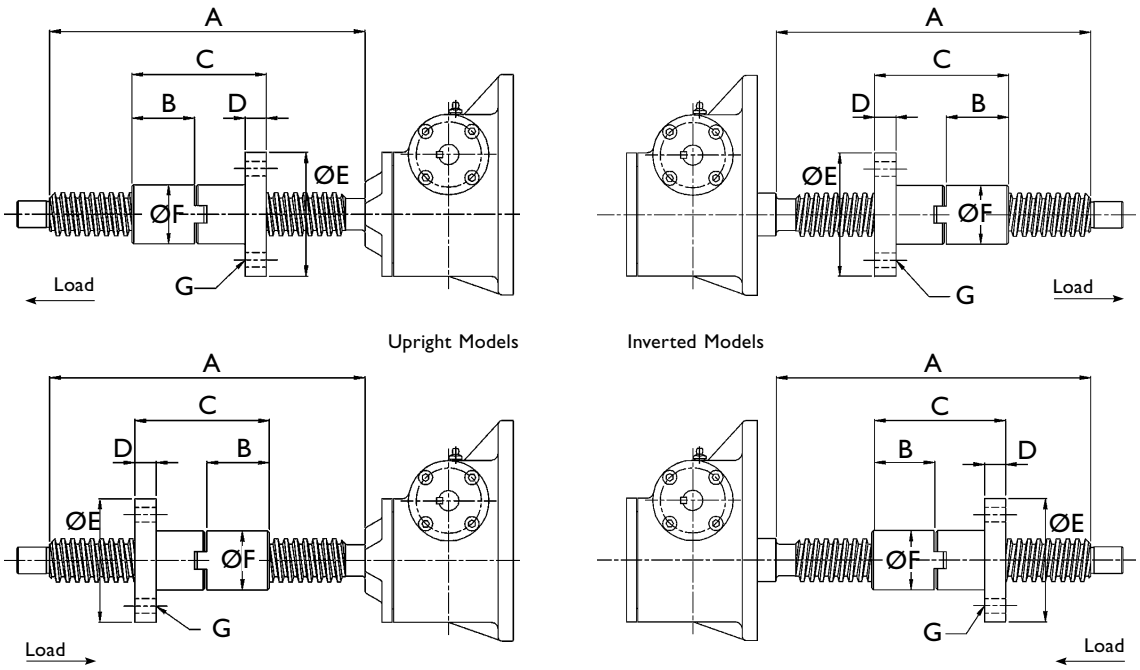

Upright Rotating Screw

Model Number	Rating (KN)	A	B	C	D	E	F	G
UE-1803	25	Raise + 95	33.5	75	15	90	40	4 Holes - 13.5 Dia. on 65 Dia. P.C.D.
UE-1806	50	Raise + 140	58	125	20	115	55	4 Holes - 18 Dia. on 85 Dia. P.C.D.
UE-1811	100	Raise + 170	67	145	25	160	80	4 Holes - 22 Dia. on 120 Dia. P.C.D.
UE-1821	200	Raise + 170	67	145	25	185	90	4 Holes - 26 Dia. on 135 Dia. P.C.D.

Inverted Rotating Screw

Model Number	Rating (KN)	A	B	C	D	E	F	G
DE-1803	25	Raise + 95	33.5	75	15	90	40	4 Holes - 13.5 Dia. on 65 Dia. P.C.D.
DE-1806	50	Raise + 140	58	125	20	115	55	4 Holes - 18 Dia. on 85 Dia. P.C.D.
DE-1811	100	Raise + 170	67	145	25	160	80	4 Holes - 22 Dia. on 120 Dia. P.C.D.
DE-1821	200	Raise + 170	67	145	25	185	90	4 Holes - 26 Dia. on 135 Dia. P.C.D.

Note: 1. All dimensions in millimetres. 2. Dimensions subject to change without notice.

1.2.3. M-Series Imperial Machine Screw Jack Models

Advantages

- Positive, Mechanical Positioning
- Uniform, Lifting Speed
- Multiple Arrangements
- Anti-Backlash Feature (optional)

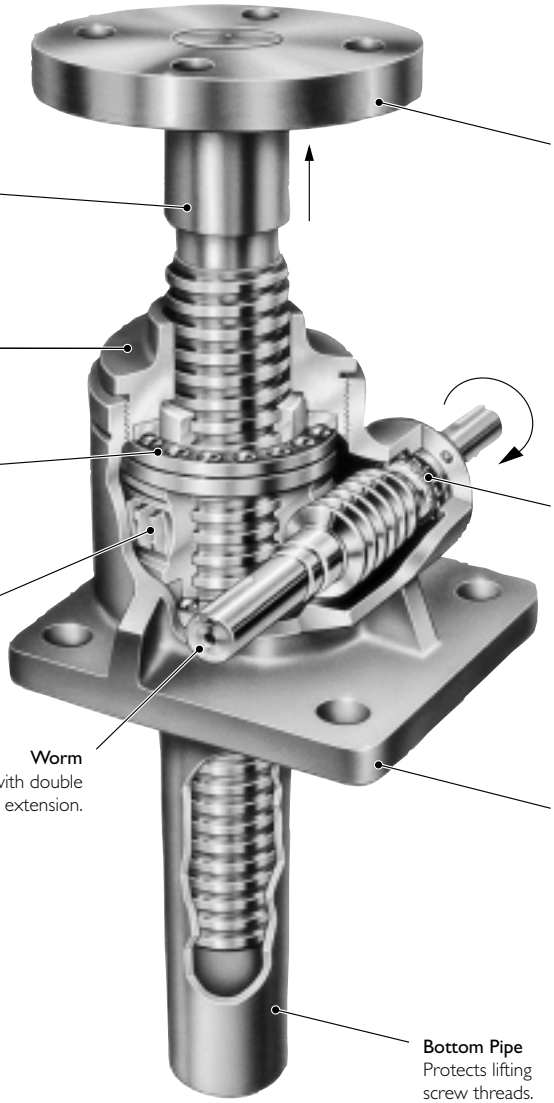

Capacities from 1/4 Ton to 250 Ton
Worm Gear Ratios from 5:1 to 50:1

The imperial machine screw actuator range is produced in many standard models with a wide range of capabilities, there is a standard model for almost any requirement.

Operated manually or by motor units imperial actuator models can be used singly, in tandem or in multiple arrangements (refer 1.1.5.2.9.). Since most capacities have a uniform lifting speed, added economy can be realised in raising unevenly distributed loads by operating the different capacities in unison.

Most imperial machine screw actuator models with higher ratios are self-locking and will hold heavy loads in position indefinitely without creep, in ideal conditions. However if self-locking is critical, a brake motor or other restraining device should be considered. They can be used to push, pull, apply pressure and as linear actuators. They are furnished with standard raises in increments of 1 inch. Depending upon size and type of load, models are available with raises up to 25 feet.

More Than 200 Standard Combinations

Features

- **Precise Positioning** - Can be controlled accurately for positioning within thousandths of a millimetre.
- **Self-Locking** - Will normally hold loads in position without creeping when using the higher ratio units, as long as the actuator unit is not subject to vibration. If self-locking is critical a brake motor or other restraining device should be considered.
- **Uniform Lifting Speed** - Since many models have the same gear ratios, various capacities can be used in the same application to lift unevenly distributed loads with uniform speed.
- **Quick, Sure Operation** - Designed and built to be positive acting, for accurate response to motive power.

Options

- **Anti-Backlash Option** - Reduces vertical backlash between the screw and the worm gear nut to a practical minimum for smooth, precise operation and minimum wear.
- **Keyed Option** - Stops a translating screw from rotating when the screw ends are free.
- **Bellows Boot Option** - Protects the screw from dust, dirt, moisture and corrosive contaminants.
- **Double Clevis End Option** - Incorporates a special clevis end bottom pipe and a standard clevis end on the lifting screw.

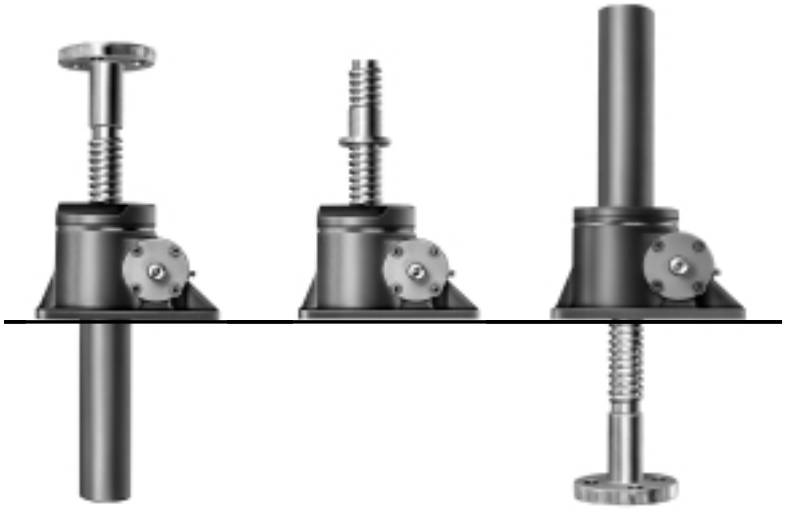

Upright Screw

Rotating Screw (Upright)
Available in both upright and inverted types

Inverted Screw

Clevis

Threaded

Note *Clockwise rotation of worm raises load on all models (refer to previous page) - counter clockwise available at extra charge.*
Unless a translating lifting screw is keyed, the top should be bolted to the lifting member to prevent the screw from rotating.
Actuators are equipped with "Alemite" grease fittings.
Recommended lubricants are listed in the installation and maintenance instructions.
Actuators supplied complete with drive shaft keys.

Attachments

Nema C-Face flanges, motors, gear boxes, reducers and couplings available for single actuator drive or multiple actuator arrangements (refer 4, 5, 6, 7 and 8).

Motion control components include motor drives, Motion Controllers with operator interfaces, encoders, limit switches, potentiometers and meters with LCD display (refer 8.).

1.2.3.1. Performance of Standard M-Series Imperial Machine Screw Jacks

Note *For loads from 25% to 100% of actuator capacity, torque requirements are approximately proportional to the load.*

Raises, measured in increments of one inch, are available up to 20 feet, depending on lifting screw diameter and available bar stock length.

Model	Upright	2555	2625	2501	1802 & 9002	1805	1810	1815	1820	1825	9035	1850	9075	1899	18150	2250
	Inverted	2554	2624	2500	1801 & 9001	1804	1809	1814	1819	1824	9034	1849	9074	1898	18149	2249
Capacity (Short Tons)		0.25	0.5	1	2	5	10	15	20	25	35	50	75	100	150	250
Lifting Screw	Diameter	0.5	0.625	0.75	1	1.5	2	2.25	2.5	3.375	3.75	4.5	5	6	7	9
	Pitch	0.25	0.125	0.2	0.25	0.375	0.5	0.5	0.5	0.666	0.666	0.666	0.666	0.75	1	1
	Form	Acme	Acme	Acme	Acme	Square	Square	Square	Square	Square	Acme	Square	Square	Square	Square	Square
Worm Gear Ratios	Standard	5:1	5:1	5:1	6:1	6:1	8:1	8:1	8:1	10 2/3:1	10 2/3:1	10 2/3:1	10 2/3:1	12:1	12:1	50:1
	Optional	-	-	20:1	24:1	24:1	24:1	24:1	24:1	32:1	32:1	32:1	32:1	36:1	36:1	-
Turns of Worm for 1" Raise	Standard	20	40	25	24	16	16	16	16	16	16	16	16	16	12	50
	Optional	-	-	100	96	64	48	48	48	48	48	48	48	48	36	-
Max. HP per Actuator	Standard	0.333	0.333	0.5	2	4	5	5	5	8	8	15	15	25	25	35
	Optional	-	-	0.25	0.5	0.75	1.5	1.5	1.5	2.5	2.5	6	6	11	11	-
Start-Up Torque at Full Load (in.lb)	Standard	13	21	55	120	450	950	1430	2050	3360	4000	7500	12000	16000	28100	20000
	Optional	-	-	25	50	185	490	820	1170	1900	2400	4200	6600	8600	15500	-
Actuator Efficiency	Standard	0.330	0.200	0.245	0.232	0.221	0.220	0.202	0.188	0.164	0.158	0.138	0.124	0.130	0.141	0.080
	Optional	-	-	0.140	0.133	0.121	0.140	0.129	0.120	0.092	0.089	0.083	0.075	0.080	0.086	-
Weight with Base Raise of 6" (lb)		2.33	2.33	5	17	35	52	66	93	181	240	410	650	1200	1350	2700
Weight for each Additional 1" Raise (lb)		0.1	0.1	0.27	0.33	0.85	1.4	1.5	2.6	3.5	3.7	5.5	6.5	9	12.6	23

Imperial Actuators with Numeric Control Ratios

1 to 25 Ton Actuators with Decimal Ratio at no extra cost.

Numeric Control Ratios ➔ 100 Turns = 1" of Travel

Model	Upright	2501	1802 & 9002	1805	1810	1815	1820	1825
	Inverted	2500	1801 & 9001	1804	1809	1814	1819	1824
Capacity (Short Tons)		1	2	5	10	15	20	25
Lifting Screw	Diameter	0.75	1	1.5	2	2.25	2.5	3
	Pitch	0.200	0.250	0.250	0.250	0.250	0.250	0.320
	Form	Acme	Acme	Acme	Acme	Acme	Acme	Acme
Worm Gear Ratios		20:1	25:1	25:1	25:1	25:1	25:1	32:1
Turns of Worm for 1" Raise		100	100	100	100	100	100	100
Start-Up Torque at Full Load (in.lb)		24	48	175	370	640	925	1500
Actuator Efficiency		0.133	0.132	0.091	0.086	0.075	0.069	0.053
Maximum HP per Actuator		0.25	0.5	0.75	1.5	1.5	1.5	2.5

Note: 1. *All other data for these models is the same as main performance table at the top of the page.*
2. *For loads from 25% to 100% of actuator capacity, torque requirements are approximately proportional to the load.*

1.2.2.3. Standard/Imperial Translating Screw Actuators

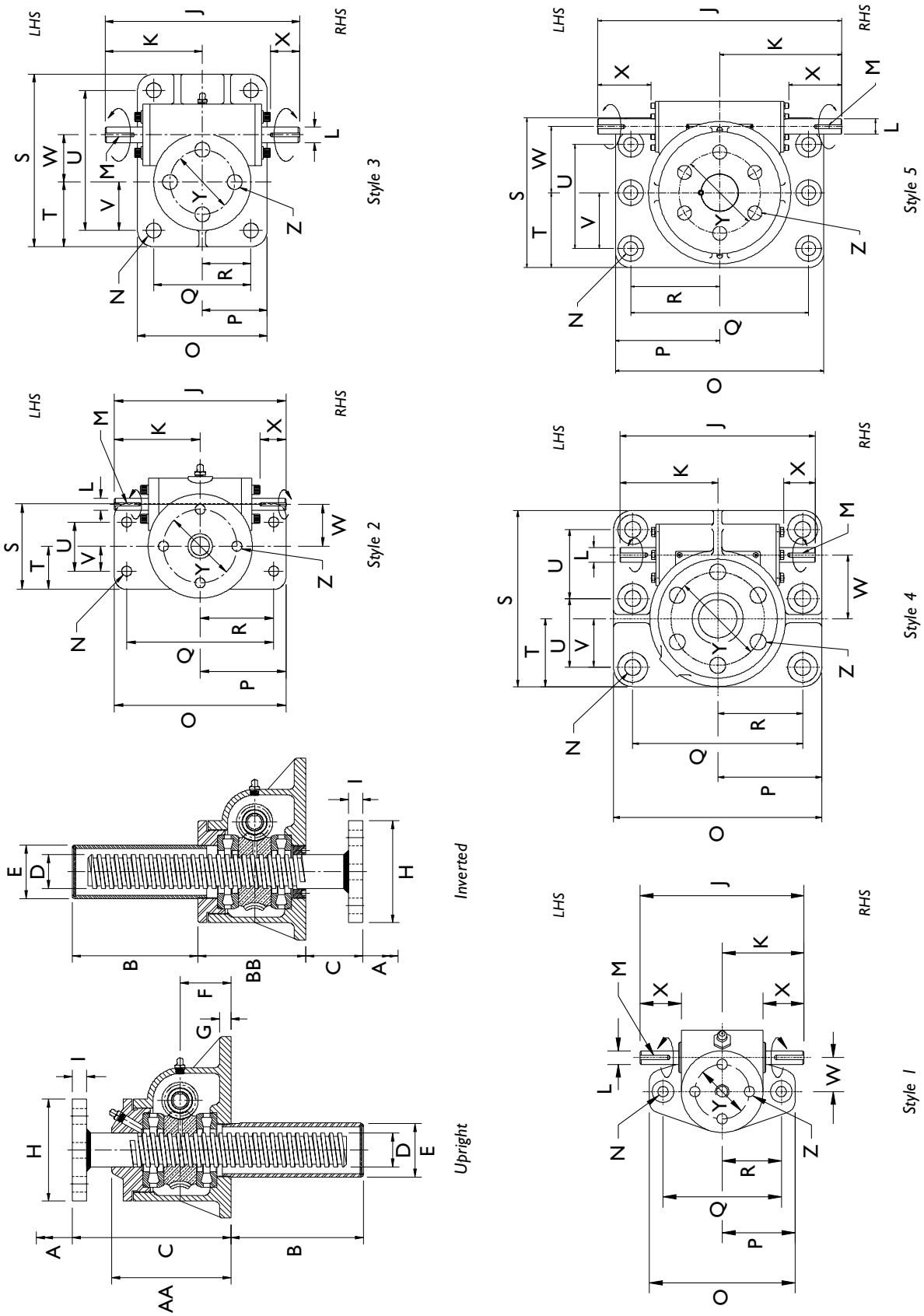

Note

1. *All dimensions in inches.*
2. *Dimensions subject to change without notice.*
3. *LHS = Left Hand Side*
4. *RHS = Right Hand Side*

Model	Upright	2555	2625	2501	1802	9002	1805	1810	1815	1820	1825	9035	1850	9075	1899	18150	2250
	Inverted	2554	2624	2500	1801	9001	1804	1809	1814	1819	1824	9034	1849	9074	1898	18149	2249
Capacity (Short Tons)		0.25	0.5	1	2	2	5	10	15	20	25	35	50	75	100	150	250
Style		1	1	1	2	3	3	3	3	3	3	3	2	2	4	4	5
A	RAISE	AS REQUIRED															
B	Upright	A+3/4	A+3/4	A	A-1/8	A-1/4	A-1/8	A-1/8	A-1/8	A-1/2	A	A	A-3/8	A-1/2	A+/-1/4	A-1/2	A-2
	Inverted	A+3/4	A+3/4	A	A-1/8	A	A-1/8	A-1/8	A-1/8	A-1/2	A	A-1	A-3/8	A-1/2	A+/-1/4	A-1/2	A+1/2
C	Upright	4	4	4.5	5.25	5.25	7	7.25	8	9.25	11	12	13	16.5	24	24	30
	Inverted	2	2	1.25	1.75	1.75	2.5	2.75	2.75	3	3	4	3.5	5.5	12	12	12
D	DIA.	0.5	0.625	0.75	1	1	1.5	2	2.25	2.5	3.375	3.75	4.5	5	6	7	9
E	Diameter	7/8	7/8	15/16	121/32	121/32	23/8	27/8	27/8	31/2	41/2	41/2	59/16	65/8	7	8	11
F		1	1	1.5	1.75	1.75	2.25	2.25	2.75	3.25	4	4	4.75	5.5	6	6	9
G		5/16	5/16	3/8	1/2	1/2	1/2	1/2	5/8	3/4	1	11/4	11/4	13/8	11/2	11/2	21/2
H	DIA.	21/4	21/4	31/2	41/4	41/4	41/2	53/4	53/4	53/4	81/2	101/2	111/4	111/4	14	14	24
I		5/16	5/16	3/8	7/16	7/16	5/8	3/4	3/4	3/4	1	15/16	11/4	13/8	215/16	215/16	315/16
J		41/2	41/2	6	7	7	9	11	11	11	14	14	22	24	23	23	48
K		21/4	21/4	3	3.5	3.5	4.5	5.5	5.5	5.5	7	7	11	12	11.5	11.5	24
L	DIA.	0.375 +0.000 -0.002	0.375 +0.000 -0.002	0.500 +0.000 -0.002	0.500 +0.000 -0.002	0.500 +0.000 -0.002	0.75 +0.000 -0.002	1 +0.000 -0.002	1 +0.000 -0.002	1 +0.000 -0.002	1.375 +0.000 -0.002	1.375 +0.000 -0.002	1.5 +0.000 -0.002	1.75 +0.000 -0.002	1.75 +0.000 -0.002	1.875 +0.000 -0.002	3 +0.000 -0.002
M		1/8 x 1/16 3/4 LNG	1/8 x 1/16 3/4 LNG	1/8 x 1/16 1 LNG	1/8 x 1/16 1 LNG	1/8 x 1/16 1 LNG	3/16 x 3/32 11/4 LNG	1/4 x 1/8 11/2 LNG	1/4 x 1/8 11/2 LNG	1/4 x 1/8 11/2 LNG	5/16 x 5/32 2 LNG	0.313 x 0.156 2 LNG	3/8 x 3/16 21/4 LNG	3/8 x 3/16 21/4 LNG	1/2 x 1/4 3 LNG	1/2 x 1/4 3 LNG	3/4 x 3/8 5 LNG
N	DIA.	9/32	9/32	13/32	13/32	13/32	11/16	13/16	13/16	11/8	13/8	15/8	17/8	21/8	17/8	17/8	23/4
O		4	4	5	7	41/8	6	7.5	73/4	81/4	101/4	10.25	193/4	14	241/2	24.5	41
P		2	2	21/2	3.5	21/16	3	33/4	37/8	41/8	51/8	51/8	97/8	7	121/4	121/4	201/2
Q		31/4	31/4	4	6	31/8	41/2	53/4	6	6	71/2	71/2	16	10	20	20	35
R		15/8	15/8	2	3	19/16	21/4	27/8	3	3	33/4	33/4	8	5	10	10	17.5
S		-	- -	-	31/2	61/4	8	83/4	91/4	11	133/4	151/2	93/4	23	203/4	203/4	291/2
T		-	-	-	13/4	2.42	3	27/8	33/8	41/8	51/8	6	47/8	9.5	8	8	14.75
U		-	-	-	2	51/4	61/2	7	71/2	83/4	11	12.5	6	19	81/8	81/8	201/2
V		-	-	-	1	1.93	2.25	2	2.5	3	3.75	4.5	3	7.5	5.75	5.75	11
W		0.938 +0.003 -0.000	0.938 +0.003 -0.000	1.25 +0.003 -0.003	1.703 +0.001 -0.001	1.703 +0.001 -0.001	2.188 +0.002 -0.000	2.598 +0.003 -0.000	2.598 +0.003 -0.000	2.598 +0.003 -0.000	3.75 +0.005 -0.000	3.75 +0.005 -0.000	5.313 +0.003 -0.000	5.313 +0.003 -0.000	7.5 +0.003 -0.000	7.5 +0.003 -0.000	13 +0.005 -0.000
X		11/8	11/8	17/16	11/8	11/8	111/32	123/32	123/32	13/8	23/16	23/16	45/16	41/8	37/16	41/4	101/2
Y	P.C.D	1.5	1.5	2.5	3	3	3	4.13	4.13	4.13	6	7.75	8.75	10.25	11	11	16
Z	DIA.	9/32	9/32	7/16	13/32	13/32	11/16	13/16	13/16	13/16	11/16	15/8	13/8	1.5	17/8	17/8	23/4
	No. of Holes	4	4	4	4	4	4	4	4	4	4	4	4	6	6	6	6
A-A		23/8	23/8	31/4	41/16	41/16	51/4	55/8	65/16	71/8	87/8	87/8	107/8	139/16	17	17	231/8
B-B		23/8	23/8	31/4	33/4	33/4	43/4	5	51/2	71/8	87/8	87/8	107/8	139/16	17	17	231/8

Note *Dimensions are subject to change without notice.*

1.2.3.3. Standard Imperial Rotating Screw Actuators

For other dimensions and performance data refer to translating screw model. All dimensions in inches.

Upright Rotating Screw

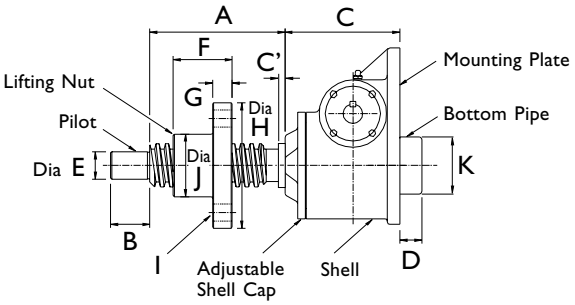

Model UM	Capacity (Short Tons)	Style	A	B	C	C'	D	E	F	G	H	I			J	K
												Holes	Dia.	P.C.D.		
2556	0.25	1	Raise + 1.5	5/8	2 3/8	0	0	0.312	7/8	3/8	2.25	4	9/32	1.75	1	0
2626	0.5	1	Raise + 1 7/8	5/8	2 3/8	0	0	0.437	7/8	3/8	2.25	4	9/32	1.75	1	0
2502	1	1	Raise + 1.75	5/8	3 1/4	0	0	0.5	1.5	0.5	3.25	4	13/32	2 3/8	1.5	0
1803	2	2	Raise + 2 3/8	0.75	4 1/16	0	0	0.625	1.5	0.5	3.25	4	13/32	2 3/8	1.5	0
9003	2	3	Raise + 2 3/8	0.75	4 1/16	0	0	0.625	1.5	0.5	3.25	4	13/32	2 3/8	1.5	0
1806	5	3	Raise + 3	1	5 1/4	0	0	1	2.5	0.75	4	4	9/16	3	2	0
1811	10	3	Raise + 4	2	5 5/8	0	1	1.249	3	1	6	4	0.81	4.5	3	2 7/8
1816	15	3	Raise + 4	2	6 5/16	0	1	1.5	3	1	6.5	4	0.81	5	3.5	2 7/8
1821	20	3	Raise + 5	2.5	7 1/8	0	1.75	1.75	3	1	7.5	4	0.94	5.5	3.75	3 1/2
1826	25	3	Raise + 7	3	8 7/8	3 1/8	2	2.5	5.5	1.25	8.5	4	1 1/16	6.5	4.5	4.5
9036	35	3	Raise + 6	3.5	8 7/8	0	2	3	5.5	1.5	9	4	1 1/16	7	5	4.5
1851	50	2	Raise + 7	4	10 7/8	1 1/8	2.5	3.5	6	2	10	6	1 1/16	8	6	5.56
9076	75	2	Raise + 8.5	4.5	13 9/16	1 1/16	2.5	4	7.5	2	12.5	6	1 1/8	10	7	6 5/8
1897	100	4	Raise + 8	5	17	2	5	5	7	2	14	6	1 1/8	11	8	7
18151	150	4	Raise + 9.75	5.5	17	2	3.5	5.5	8.75	2.5	15.5	6	1.5	12.5	9	8

Inverted Rotating Screw

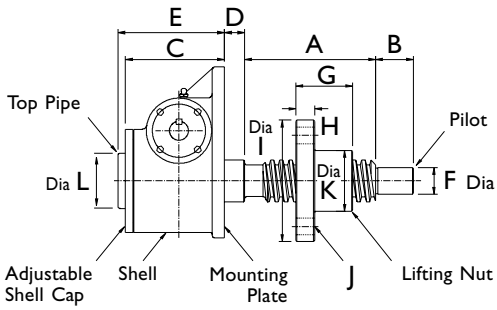

Model DM	Capacity (Short Tons)	Style	A	B	C	D	E	F	G	H	I	J			K	L
												Holes	Dia.	P.C.D.		
2556	0.25	1	Raise + 1.5	5/8	2 3/8	3/8	2 3/8	0.312	7/8	3/8	2.25	4	9/32	1.75	1	0
2626	0.5	1	Raise + 1 7/8	5/8	2 3/8	3/8	2 3/8	0.437	7/8	3/8	2.25	4	9/32	1.75	1	0
2502	1	1	Raise + 1.75	5/8	3 1/4	0.25	3 1/4	0.5	1.5	0.5	3.25	4	13/32	2 3/8	1.5	0
1803	2	2	Raise + 2 3/8	0.75	4 1/16	5/8	4 1/16	0.625	1.5	0.5	3.25	4	13/32	2 3/8	1.5	0
9003	2	3	Raise + 2 3/8	0.75	4 1/16	5/8	4 1/16	0.625	1.5	0.5	3.25	4	13/32	2 3/8	1.5	0
1806	5	3	Raise + 3	1	5 1/4	2	5 1/4	1	2.5	0.75	4	4	9/16	3	2	0
1811	10	3	Raise + 4	2	5 5/8	1.13	5 5/8	1.249	3	1	6	4	0.81	4.5	3	0
1816	15	3	Raise + 4	2	6 5/16	0.81	6 1/2	1.5	3	1	6.5	4	0.81	5	3.503	2 7/8
1821	20	3	Raise + 5	2.5	7 1/8	0.63	7 7/8	1.75	3	1	7.5	4	0.94	5.5	3.75	3.5
1826	25	3	Raise + 7	3	8 7/8	1.5	9 7/8	2.5	5.5	1.25	8.5	4	1 1/16	6.5	4.5	4.5
9036	35	3	Raise + 6	3.5	8 7/8	0.88	9 7/8	3	5.5	1.5	9	4	1 1/16	7	5	4.5
1851	50	2	Raise + 7	4	10 7/8	2 5/8	11 1/2	3.5	6	2	10	6	1 1/16	8	6	5.56
9076	75	2	Raise + 8.5	4.5	13 9/16	3 5/8	15 1/16	4	7.5	2	12.5	6	1 1/8	10	7	6 5/8
1897	100	4	Raise + 8	5	17	2	18	5	7	2	14	6	1 1/8	11	8	7
18151	150	4	Raise + 9.75	5.5	17	2	17	5.5	8.75	2.5	15.5	6	1.5	12.5	9	8

Note *Dimensions subject to change without notice.*

1.2.3.4. Standard Imperial Translating Screw Ends

Model	Upright	2555	2625	2501	1802	9002	1805	1810	1815
	Inverted	2554	2624	2500	1801	9001	1804	1809	1814
Capacity (Short Tons)		0.25	0.5	1	2	2	5	10	15
Threaded End									
A		3/8-24 UNF-2A	3/8-24 UNF-2A	1/2-13 UNC-2A	3/4-10 UNC-2A	3/4-10 UNC-2A	1-8 UNC-2A	1 1/2-6 UNC-2A	1.75-5 UNC-2
B	DIA	0.5	5/8	0.75	1	1	1.5	2	2.25
C		0.75	1	0.75	1 1/8	1 1/8	1 1/8	1 5/8	2
D	Upright	4	4	5 3/8	6	6	8	8.75	9.75
	Inverted	2	2	2	2.5	2.5	3.5	4.25	4.25
E		1/8	1/8	1/8	1/8	0.19	0.19	0.25	0.25
Clevis End									
F		13/64	17/64	21/64	13/32	13/32	21/32	25/32	29/32
G		3/8	0.5	0.5	0.75	0.75	1	1.25	1.5
H		0.5	5/8	0.75	1	1	1.5	2	2.25
I		0.375	0.5	0.375	0.75	0.75	1	1.25	1.25
K	Upright	4	4	5	5.25	5.25	7	7.5	8.5
	Inverted	2	2	1 5/8	1.75	1.75	2.5	3	3

Model	Upright	1820	1825	9035	1850	9075	1899	18150	2250
	Inverted	1819	1824	9034	1849	9074	1898	18149	2249
Capacity (Short Tons)		20	25	35	50	75	100	150	250
Threaded End									
A		2-4.5 UNC-2A	3-4 UNC-2A	3.25-4 UNC-2A	4-4 UNC-2A	4-12 UNC-2A	4 1/2-12 UNC-2A	5-12 UNC-2A	8-12 UNC-2A
B	DIA	2.5	3.375	3.75	4.5	5	6	7	9
C		2.25	3.25	3.75	4.25	4.5	5	5	6
D	Upright	11.5	13.75	15	17.5	20.5	25	25	30
	Inverted	5	5.75	7	8	9.5	12	12	12
E		0.25	0.25	0.25	0.25	0.25	0.25	0.25	0.25
Clevis End									
F		1 1/32	1 9/32	1 17/32	1 25/32	2 1/32	2 17/32	2 25/32	3 17/32
G		1.75	2.25	2.5	3.25	3.5	4.25	5.25	7
H		2.5	3.375	3.75	4.5	5	6	7	9
I		1.5	1.75	2	2.5	2.5	3	3	4
K	Upright	10	12	13	15	18	24	24	30
	Inverted	3.5	4	5	5.5	7	9	9	12

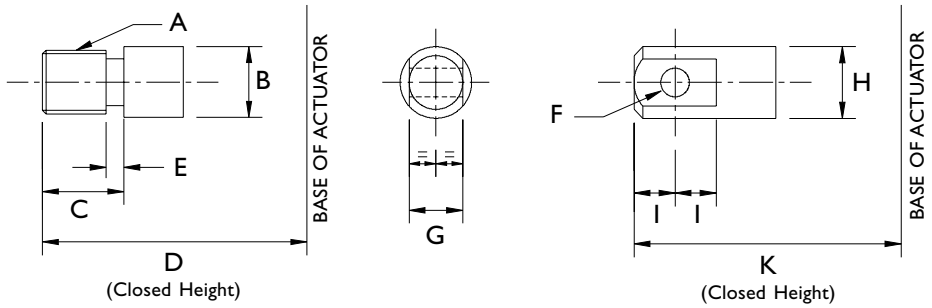

Note 1. *All dimensions in inches.*
2. *Dimensions subject to change without notice.*

1.2.3.5. Imperial Double Clevis End Actuators

Note *For other performance and dimension information refer to translating screw models.*

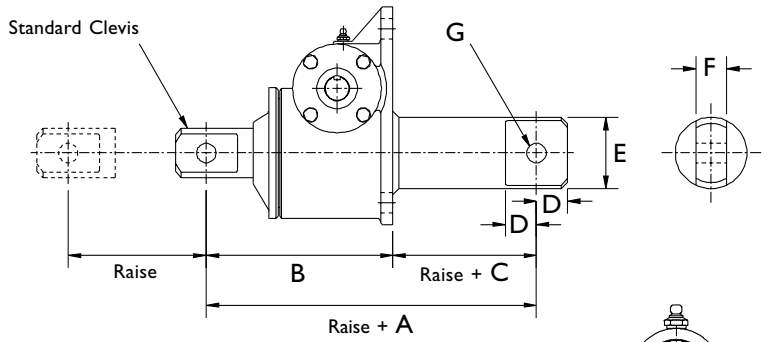

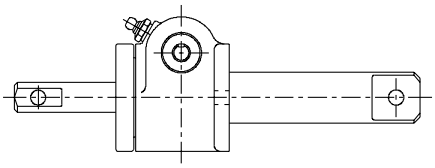

Style 1

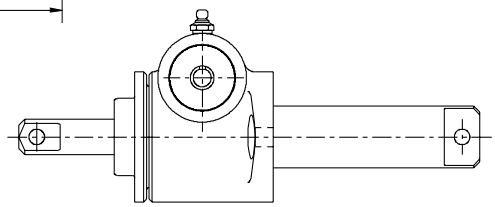

Style 2

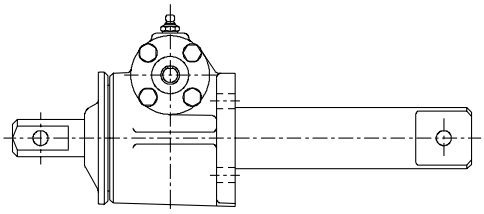

Style 3

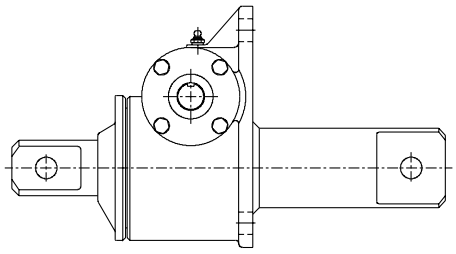

Style 4

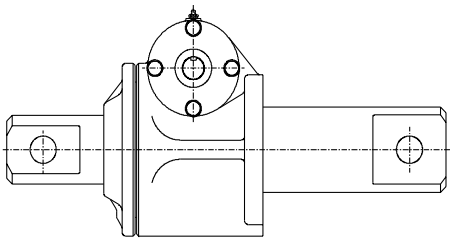

Style 5

Model	CCM 2555	CCM 2625	CCM 2501	CCM 1802	CCM 1805	CCM 1810	CCM 1815	CCM 1820	CCM 1825	CCM 9035	CCM 1850
Capacity (Short Tons)	0.25	0.5	1	2	5	10	15	20	25	35	50
Style	1	1	2	3	4	4	4	4	4	4	5
A	5.5	5.5	6.5	6.75	9	10.25	11.25	13.5	16	17	19
B	4	4	5	5.25	7	7.5	8.5	10	12	13	15
C	1.5	1.5	1.5	1.5	2	2.75	2.75	3.5	4	4	4
D	-	-	-	0.75	1	1.25	1.25	1.5	1.75	2	2.5
E	1 1/16	1 1/16	1 5/16	1 21/32	2.38	2.88	2.88	3.5	4.5	4.5	5 9/16
F	3/8	0.5	0.5	0.75	1	1.25	1.5	1.75	2.75	2.5	3.25
G	13/64	17/64	21/64	0.41	0.66	0.78	0.91	1.03	1.28	1.53	1 25/32
Max Allowable Raise (compression) at load (lb)	5.75 500	9.25 1000	9.75 1500	14.5 3000	22.5 6500	31 12000	37 3/8 16000	39.25 20000	54 38000	73.5 61000	94.5 98000
Max Raise at Rated Load (compression)	5.75	9.25	8.25	12 1/8	17	22 7/8	25 7/8	29.25	47	69	90.5

Note *1. All dimensions in inches unless otherwise stated.*
2. Dimensions subject to change without further notice.

1.2.3.6. Imperial Actuators with Anti-Backlash Feature

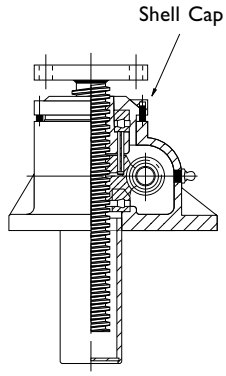

Imperial actuators are available with anti-backlash nuts for applications where a reversal of loading from tension to compression is encountered. These are based on the 1800 and 9000 series actuators and are designated 4800 and 9400 series.

Anti-Backlash Features

- Reduction in the vertical backlash between the screw and the worm gear nut to a practical minimum for smoother, more precise operation and minimum wear.
- Acts as a safety device, providing a dual nut load carrying unit, when the worm gear becomes worn.
- Wear indicator for critical applications.

The anti-backlash feature can be maintained by adjusting the shell cap until the desired amount of backlash is achieved. To avoid binding and excessive wear, do not adjust lifting screw backlash to less than 0.005".

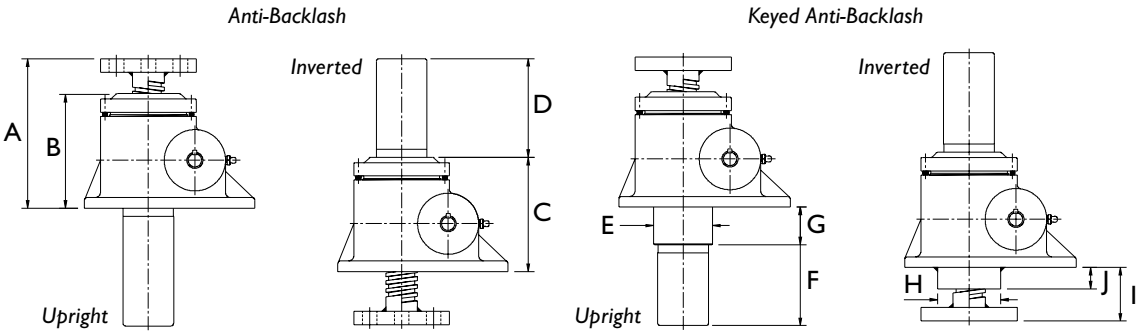

Standard Dimensions (inches)

Anti-Backlash					Keyed Anti-Backlash						
Model	A	B	C	D	Model	E	F	G	H	I	J
4555	4	2.38	2.38	Raise + 0.75	**4555-K**	1.5	Raise + 0.75	0.75	1.5	2	0.75
4625	4	2.88	2.43	Raise + 0.75	**4625-K**	1.25	Raise + 0.75	0.81	1.25	2	0.81
4501	5	3.84	3.38	Raise + 1.63	**4501-K**	1.06	Raise + 1.13	0.75	1.5	2	0.75
4802	5.25	3.88	3.88	Raise + 0.75	**4802-K**	2.25	Raise - 0.13	1.25	2.25	1.75	0.63
4805	7	5.43	5.43	Raise - 0.25	**4805-K**	2.75	Raise + 0.38	1.75	2.75	2.5	0.88
4810	7.25	5.75	5.75	Raise	**4810-K**	3.38	Raise	2	3.38	2.75	1.13
4815	8	6.13	6.13	Raise	**4815-K**	3.63	Raise	2	3.63	2.75	1.25
4820	9.5	7.75	7.75	Raise + 0.75	**4820-K**	4.0	Raise + 0.75	1.5	4	3	1.0
4825	12	9.69	9.69	Raise + 1	**4825-K**	5.5	Raise	2.25	5.5	3	1.25
9435	13	9.44	9.44	Raise + 1.75	**9435-K**	6.5	Raise + 0.69	2.38	6.5	4	1.25
4850	14	11.75	11.75	Raise + 1.75	**4850-K**	7.0	Raise + 0.75	3	7.0	5	3.0
9475	18.5	15.25	15.25	Raise + 1	**9475-K**	7.5	Raise + 1	4	7.5	6.5	4.0
4899	26.5	18.06	18.06	Raise + 0.5	**4899-K**	8.5	Raise + 1	5	8.5	12	5.0
48150	26.5	18.06	18.06	Raise + 0.5	**48150-K**	10	Raise + 1	5.56	10	12	5.56

Torque and Efficiencies for Standard Anti-Backlash Actuators

Model	Upright	**4555**	**4625**	**4501**	**4802**	**4805**	**4810**	**4815**	**4820**	**4825**	**9435**	**4850**	**9475**	**4899**	**48150**
	Inverted	**4554**	**4624**	**4500**	**4801**	**4804**	**4809**	**4814**	**4819**	**4824**	**9434**	**4849**	**9474**	**4898**	**48149**
Capacity, Short Tons		0.25	0.5	1	2	5	10	15	20	25	35	50	75	100	150
Start-Up Torque at Full Load (in.lb)	Std Ratio	15	24	60	135	500	1005	1658	2261	3712	5083	8022	13204	17004	31330
	Option 1	-	-	27	56	228	526	904	1228	1997	3014	4542	7314	9210	17225
Efficiency Rating	Std Ratio	0.277	0.168	0.212	0.196	0.199	0.198	0.180	0.176	0.134	0.137	0.124	0.113	0.117	0.127
	Option 1	-	-	0.117	0.119	0.109	0.126	0.110	0.108	0.083	0.077	0.073	0.068	0.072	0.077
Weight with Base Raise of 6" (lbs)		2.5	2.5	6	18	37	55	70	101	197	250	440	750	1325	1475

Note *For loads from 25% to 100% of actuator capacity, torque requirements are proportional to the load.*

1.2.3.7. Imperial Machine Screw Actuators with Bellows Boots

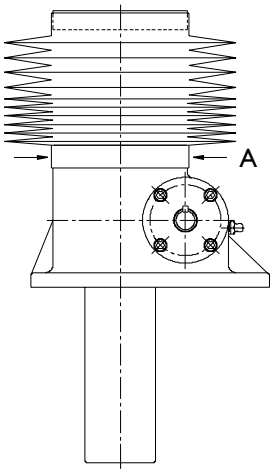

- Protects the screw from dust and dirt.
- Helps maintain the proper lubrication.
- Guards against moisture and corrosive contaminants.
- Boots are made of neoprene-coated nylon with sewn construction. Other materials are available for applications involving high temperatures, highly corrosive atmospheres and other special conditions.

Boot Installation Data

Capacity	500 lb	1000 lb	1 Ton	2 Ton	5 Ton	10 Ton	15 Ton	20 Ton
Shell Cap Diameter "A"	2.25	2.25	2.75	3.5	4.5	5.25	5.625	6

Capacity	25 Ton	35 Ton	50 Ton	75 Ton	100 Ton	150 Ton	250 Ton
Shell Cap Diameter "A"	7.5	7.875	11.25	13.25	10	10	16

Note *For horizontal installation exceeding 18" of travel, internal boot guides are recommended.*

Upright Imperial Machine Screw Actuators with Bellows Boots

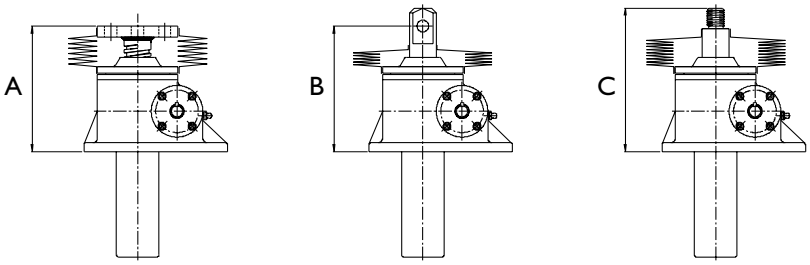

Top Plate *Clevis End* *Threaded End*

Model No	Boot O.D.	Raise																							
		0-12"			12"-18"			18"-24"			24"-30"			30"-36"			36"-48"			48"-60"			60"-72"		
		A	B	C	A	B	C	A	B	C	A	B	C	A	B	C	A	B	C	A	B	C	A	B	C
2555	4.25	4	4	4 1/4	4 3/4	4 5/8	5	-	-	-	-	-	-	-	-	-	-	-	-	-	-	-	-	-	-
2625	4.25	4	4	4 1/2	4 1/4	4 5/8	4 1/2	4 1/4	4 5/8	4 1/2	-	-	-	-	-	-	-	-	-	-	-	-	-	-	-
2501	6.0	4 1/2	5	5 3/8	5 1/8	5 5/8	6	5 1/2	5 3/4	6 1/4	-	-	-	-	-	-	-	-	-	-	-	-	-	-	-
1802	7.75	5 1/4	6 1/2	7 1/4	5 3/4	7 1/2	8 1/4	5 3/4	7 1/2	8 1/4	5 3/4	7 1/2	8 1/4	6 1/4	8 1/2	9 1/4	-	-	-	-	-	-	-	-	-
9002	7.75	5 1/4	6 1/2	7 1/4	5 1/4	7 1/2	8 1/4	5 3/4	7 1/2	8 1/4	5 3/4	7 1/2	8 1/4	6 1/4	8 1/2	9 1/4	-	-	-	-	-	-	-	-	-
1805	7.75	7	7	8	7	8 1/2	9 1/2	7	8 1/2	9 1/2	8	8 1/2	9 1/2	8	10	11	9	10	11	-	-	-	-	-	-
1810	9.0	7 1/4	8 1/2	9 3/4	7 1/4	8 1/2	9 3/4	7 1/4	9 1/2	10 3/4	8 1/2	9 1/2	10 3/4	8 1/2	9 1/2	10 3/4	9 1/2	10 1/2	11 3/4	10 1/2	11 1/2	12 3/4	11 1/2	12 1/2	13 3/4
1815	9.0	8	8 1/2	9 3/4	8	10	11 1/4	8	10	11 1/4	9	10	11 1/4	9	10	11 1/4	11	12	12 1/4	11	12	13 1/4	12	13	14 1/4
1820	9.0	9 1/4	10	11 1/2	9 1/4	11	12 1/2	9 1/4	11	12 1/2	10 1/2	12	13 1/2	10 1/2	12	13 1/2	11 1/2	13	14 1/2	12 1/2	14	15 1/2	13 1/2	15	16 1/2
1825	10.75	11	12	13 3/4	11	12	13 3/4	11	13 1/4	15	12	13 1/4	15	12	14 1/2	16 1/4	13	15 3/4	17 1/2	14	15 3/4	17 1/2	15	16 3/4	18 1/2
9035	11.0	12	13	15	12	13	-	12	13	15	12	13 3/4	15 3/4	12	13 3/4	15 3/4	12 7/8	14 3/4	16 3/4	13 3/4	15 1/2	17 1/2	14 3/4	16 1/2	18 1/2
1850	14.5	13	15	17 1/2	13	16	18 1/2	13	16	18 1/2	14	16	18 1/2	14	17	19 1/2	15	18	20 1/2	16	18	20 1/2	17	19	21 1/2
9075	16.5	17 1/2	19	21 1/2	17 1/2	19	21 1/2	17 1/2	19	21 1/2	17 1/2	19	21 1/2	17 1/2	19	21 1/2	18 1/2	20	20 1/2	19 1/2	21	23 1/2	20 1/2	22	24 1/2
1899	11.25	24	24	25	24	24	25	24	24	25	24	24	25	24 1/2	24 1/2	25 1/2	25	25 1/2	26 1/2	26	26 1/2	27 1/2	27	27 1/2	28 1/2
18150	12.25	24	24	25	24	24	25	24	24	25	24	24	25	24 1/2	24 3/8	25 3/8	25	25 1/8	26 1/8	26	26 7/8	26 7/8	27	26 5/8	27 5/8
2250	16.0	30	-	-	30	-	-	30	-	-	30 1/2	-	-	30 1/2	-	-	31 1/2	-	-	31 1/2	-	-	32	-	-

Note *1. (-) indicates "not applicable".*
2. For lengths of raise not detailed in the above table consult Power Jacks Ltd.
3. Dimensions subject to change without notice.
4. All dimensions in inches.

Inverted Imperial Machine Screw Actuators with Bellows Boots

1898 - 18149 only

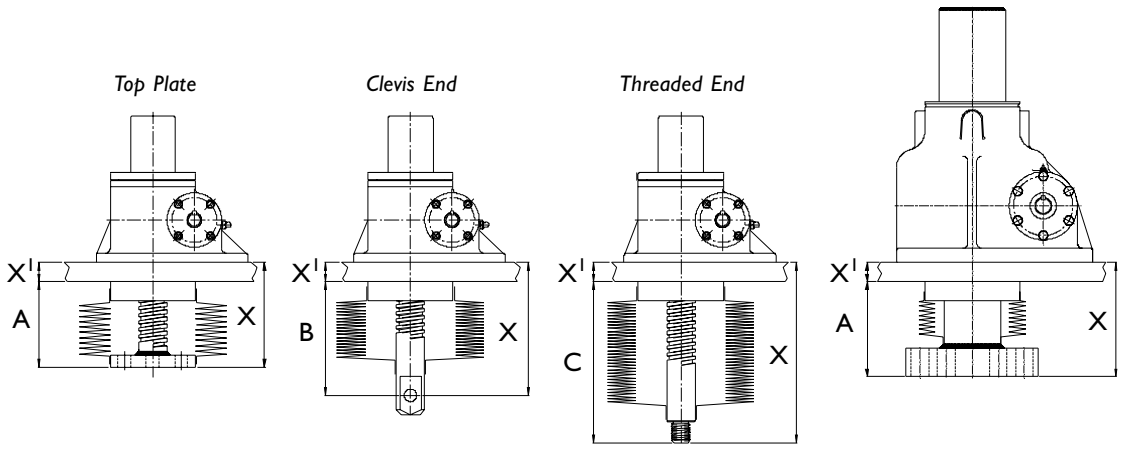

Finding minimum closed dimensions

- Add your structure thickness X¹ to A, B, or C from the appropriate chart to find the minimum closed dimension.
- Other styles and sizes of boots can be supplied.
- In order to use a standard boot, make the mounting plate diameter the same as the shell cap diameter of the appropriate actuator.
- When boots are required for rotating screw actuators, consult Power Jacks Ltd.

Model No	Raise (Inches)											
	1"-6"			7"-12"			13"-18"			19"-24"		
	A	B	C	A	B	C	A	B	C	A	B	C
2554	2	2 3/8	2	2	2 3/8	2	2 1/8	-	-	-	-	-
2624	2	2 5/8	2 1/8	2	2 5/8	2 1/8	2 1/8	3 1/4	2 3/4	-	-	-
2500	2 1/16	3	2 5/8	2 1/16	3	2 5/8	2 11/16	3 5/8	3 1/4	3 1/16	4	3
1801 & 9001	2 3/8	4 3/8	3 5/8	2 3/8	4 3/8	3 5/8	2 7/8	5 3/8	4 5/8	3	5 3/8	4 5/8
1804	3 3/16	4 3/16	3 3/16	3 3/16	4 3/16	3 3/16	3 3/16	5 11/16	4 11/16	3 1/2	5 11/16	4 11/16
1809	3 1/4	5 3/4	4 1/2	3 1/4	5 3/4	4 1/2	3 1/4	5 3/4	4 1/2	3 9/16	7	5 3/4
1814	3 1/4	5 1/4	4	3 1/4	5 1/4	4	3 1/4	6 3/4	5 1/2	3 9/16	6 3/4	5 1/2
1819	3 1/4	5 9/16	4 1/16	3 1/4	5 9/16	4 1/16	3 1/4	6 9/16	5 1/16	3 1/4	6 9/16	5 1/16
1824	3 3/8	6 3/4	5	3 3/8	6 3/4	5	3 3/8	6 3/4	5	3 3/8	7 3/4	6
9034	4 1/2	7 1/2	5 1/2	4 1/2	7 1/2	5 1/2	4 1/2	7 1/2	5 1/2	4 1/2	7 1/2	5 1/2
1849	4 7/8	9 5/16	6 13/16	4 7/8	9 5/16	6 13/16	4 7/8	10 5/16	7 13/16	4 7/8	10 5/16	7 13/16
9074 a,b,c	2 3/8	6 7/8	4 7/8	2 3/4	7 1/4	5 1/4	3	7 1/2	5 1/2	3 3/8	7 7/8	5 7/8
1898	* 7 11/16	* 8 11/16	** 7 11/16	* 7 11/16	* 8 11/16	** 7 11/16	* 7 11/16	* 8 11/16	** 7 11/16	* 7 11/16	* 8 11/16	** 7 11/16
18149	* 7 11/16	* 8 11/16	** 7 11/16	* 7 11/16	* 8 11/16	** 7 11/16	* 7 11/16	* 8 11/16	** 7 11/16	* 7 11/16	* 8 11/16	** 7 11/16

Value of X = **a)** If A+X¹ is less than 5 1/2", X = 5 1/2" **b)** If B+ X¹ is less than 9 1/2", X = 9 1/2" **c)** If C+ X¹ is less than 7", X = 7"

*If A+X¹ and B+ X¹ are less than 12", X = 12". If greater than 12", use dimensions shown.

** If C+ X¹ is less than 9", X = 9". If greater than 9", use dimensions shown.

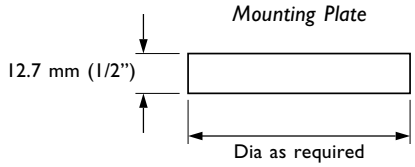

To be manufactured by installer

Note *Same values can be used for 4800 Series Actuator Units.*

Note
1. *For lengths of raise not detailed in the above table consult Power Jacks Ltd.*
2. *Dimensions subject to change without notice.*
4. *All dimensions in inches.*

1.2.3.8. Standard Imperial Flange Bolt Configuration

Note *For other performance and dimension information refer to translating screw models.*

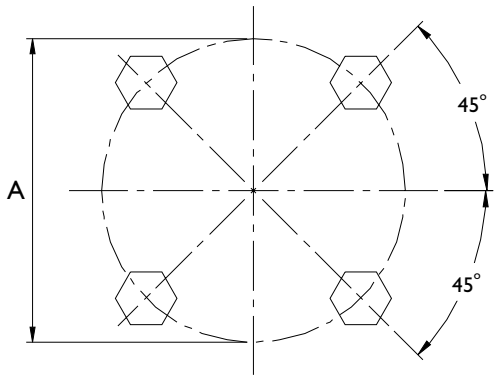

Configuration A

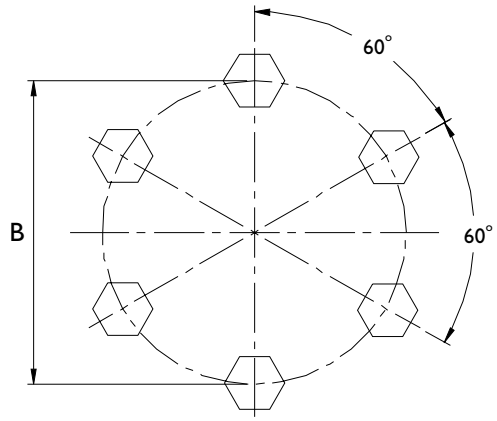

Configuration B

Model	'B' Bolt P.C.D. (inch)	Bolt Information	Configuration
2555	-	No Flange Bolts	-
2625	-	No Flange Bolts	-
2501	-	No Flange Bolts	-
1802 & 9002	1 11/16	1/4 - 20 x 3/4" Long	A
1805	2 3/8	5/16 - 18 x 3/4" Long	A
1810	2 3/4	5/16 - 18 x 3/4" Long	A
1815	2 3/4	5/16 - 18 x 1" Long	A
1820	3 1/2	3/8 - 16 x 1 1/4" Long	A
1825	4 1/8	3/8 - 16 x 1 1/4" Long	A
9035	4 1/4	1/2 - 13 x 1 1/4" Long	A
1850	5 1/4	5/8 - 11 x 1 1/2" Long	A
9075	5 3/4	5/8 - 11 x 1 1/2" Long	B
1899	6 1/4	5/8 - 11 x 1 1/2" Long	B
18150	6 1/4	5/8 - 11 x 1 1/2" Long	B
2250	8 1/4	3/4 - 10 x 2" Long	B

Note *1. All dimensions in inches unless otherwise stated.*
2. Dimensions are subject to change without notice.

1.2.3.9. Motor Adaptors for Imperial Actuators

- Standard adaptors for imperial actuators available on request.
- Designed for standard IEC frame sizes.
- Allows direct motor coupling on either side of the actuator input shaft.
- Complete with drive coupling and mounting hardware.
- NEMA frame size versions available on request.
- Adaptors for other mounting arrangements available on request.

Note *When direct coupling a motor to an actuator, it is necessary to match motor power to actuator load so the motor does not exceed the maximum actuator power.*

1.2.3.10. RLS-51 Rotary Limit Switch Adaptors for Imperial Actuators

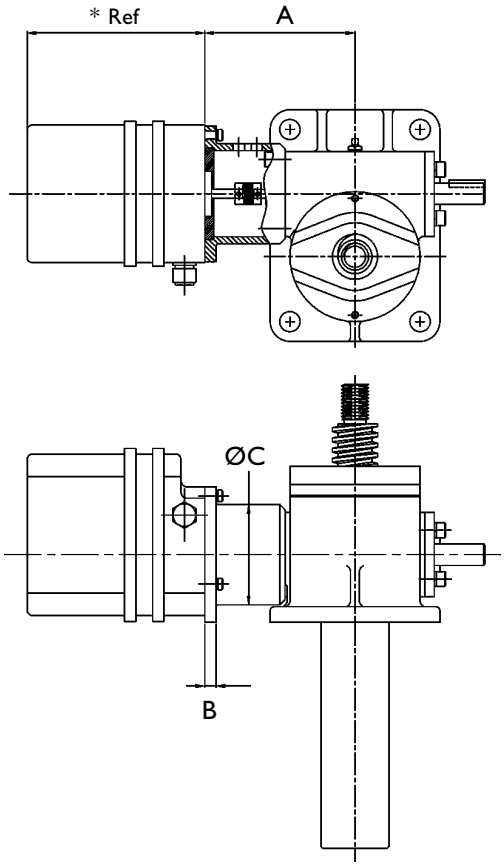

Rotary limit switches can be used as end of travel limit switches with the option of intermediate switches as well. These units are mounted onto a screw jacks free worm shaft and offer an alternative where bottom pipe mounted limit switches are not possible e.g. rotating screw jacks. Up to 8 limit switches can be accommodated in one unit.

For mounting details please consult Power Jacks.

For full details on the RLS-51 limit switch refer to section 8.1.1.

The mounting kit includes the flexible coupling and drive adaptor.

1.2.3.11. SKA Rotary Limit Switch Adaptors for Imperial Actuators

The SKA rotary limit switch is a compact 2-position limit switch designed for screw jack and linear actuator applications. For full details on the SKA limit switch refer to section 8.1.2.

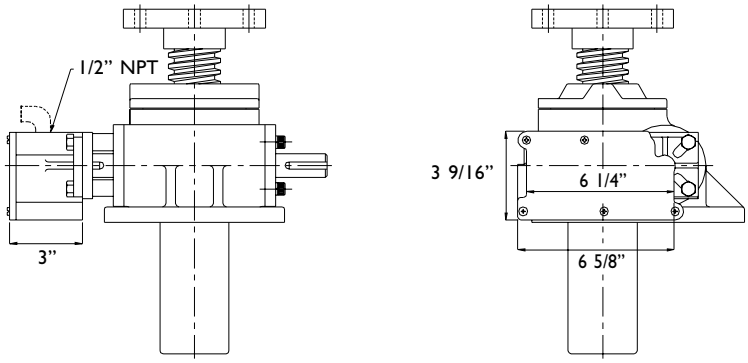

Actuator Mounted

Note *1. All dimensions are in inches unless otherwise stated.*
2. Dimensions are subject to change without notice.

1.2.3.11.1. Mounting and Adjustment Specifications for SKA Rotary Limit Switches

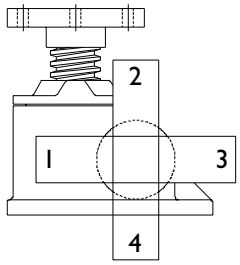

Position Number of Switch

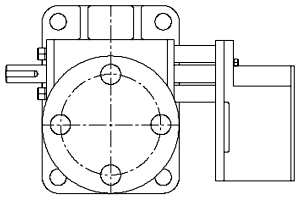

Typical top view showing switch mounted on RH worm extension

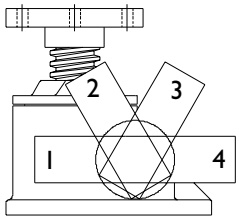

75, 100 & 150 Tons Imperial models only

Actuator	Extended Mount								Closed Mount							
Capacity (Short Ton)	RH				LH				RH				LH			
	1	2	3	4	1	2	3	4	1	2	3	4	1	2	3	4
2 & 3	C	A & B	B & D	-	B & D	A & B	C	-	-	-	-	-	-	-	-	-
5	✔	A	D	C	D	A	✔	C	✔	A & B	D	-	D	A & B	✔	-
10	✔	A	D	C	D	A	✔	C	✔	A & B	D	-	D	A & B	✔	-
15	✔	A	D	C	D	A	✔	C	-	A & B	D	-	D	A & B	-	-
20	✔	A	✔	C	✔	A	✔	C	✔	A & B	✔	-	✔	A & B	✔	-
25	✔	✔	✔	C	✔	✔	✔	C	✔	B	✔	-	✔	B	✔	-
35	✔	✔	✔	C	✔	✔	✔	C	✔	B	✔	-	✔	B	✔	-
50	✔	✔	✔	C	✔	✔	✔	C	-	✔	✔	-	-	✔	✔	-
75	✔	✔	✔	C	✔	✔	✔	C	-	✔	✔	-	-	✔	✔	-
100	✔	✔	✔	✔	✔	✔	✔	✔	-	✔	✔	✔	-	✔	✔	✔
150	✔	✔	✔	✔	✔	✔	✔	✔	-	✔	✔	✔	-	✔	✔	✔

Note *For 2 & 3 Ton inverted position, extended mount position (2) is the only one practical.*
(A) Special Closed Height. (B) Boot Interference Unit. (C) Rotary Limit Switch extends below base of Actuator Unit.
(D) Sealed electric elbow would extend below base of Actuator Unit. (✔) Recommended. (-) Not Recommended
Extended Mount is Standard.

1.2.3.11.2. SKA Limit Switch Field Installation Dimensions

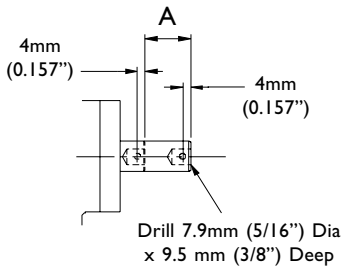

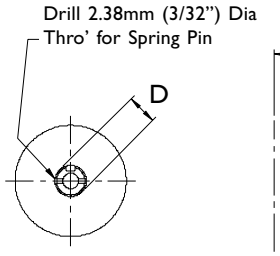

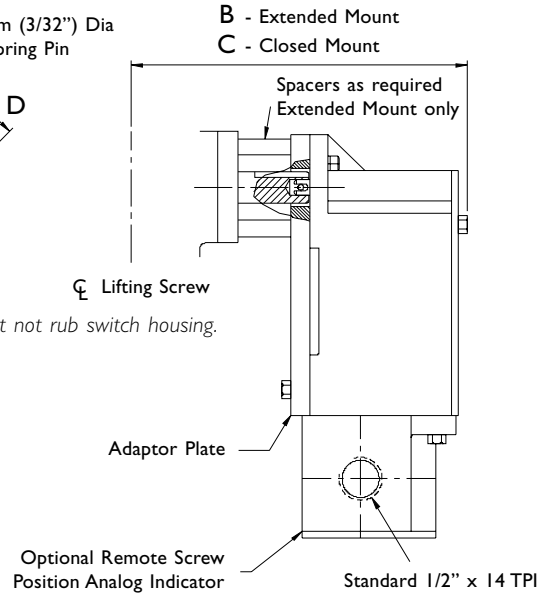

Note *Shim out on limit switch if necessary worm shaft end must not rub switch housing.*
Dimensions subject to change without notice.

Model (Short Ton)	A Cut-off Closed Mount (inch)	B Extended Mount (inch)	C Closed Mount (inch)	D Worm Shaft Dia. (inch)
2	-	6.75	-	0.500
3	1 9/32	6.75	5.5	0.625
5	1 17/32	7.75	6.25	0.750
10	1 21/32	8.75	7 1/8	1.000
15	1 29/32	8.75	6 7/8	1.000
20	1 3/8	8.75	7 13/32	1.000
25	2 7/32	10.25	8 1/16	1.375
35	2 7/32	10.25	8 1/16	1.375
50	4 21/32	14.25	9 5/8	1.500
75	4.5	15.25	10.75	1.750
100	3.75	14.75	11 1/32	1.750
150	3.75	14.75	11 1/32	1.875

Note *1. All dimensions are in inches unless otherwise stated.*
2. Dimensions are subject to change without notice.

1.2.4. E-Series Metric Stainless Steel Machine Screw Jacks

Advantages

- Capacity from 10kN → 300 kN.
- Available in Upright and Inverted models.
- Corrosion resistant.
- Different materials and plating available to suit application environments.
- External dimensions same as for Metric Machine Screw actuators.
- Keyed Anti-backlash models available.
- Anti-backlash models available.
- Uniform, Lifting Speed.
- Translating and Rotating screw models.
- Worm gear ratios from 5:1 → 32:1.
- Stainless steel hardware.
- Available with sealed gear cavity to keep water and other contaminants out.
- Available with keyed lifting screw for translating screw models.
- Secondary Guides available.
- Positive, Mechanical Positioning.
- Multiple Arrangements.

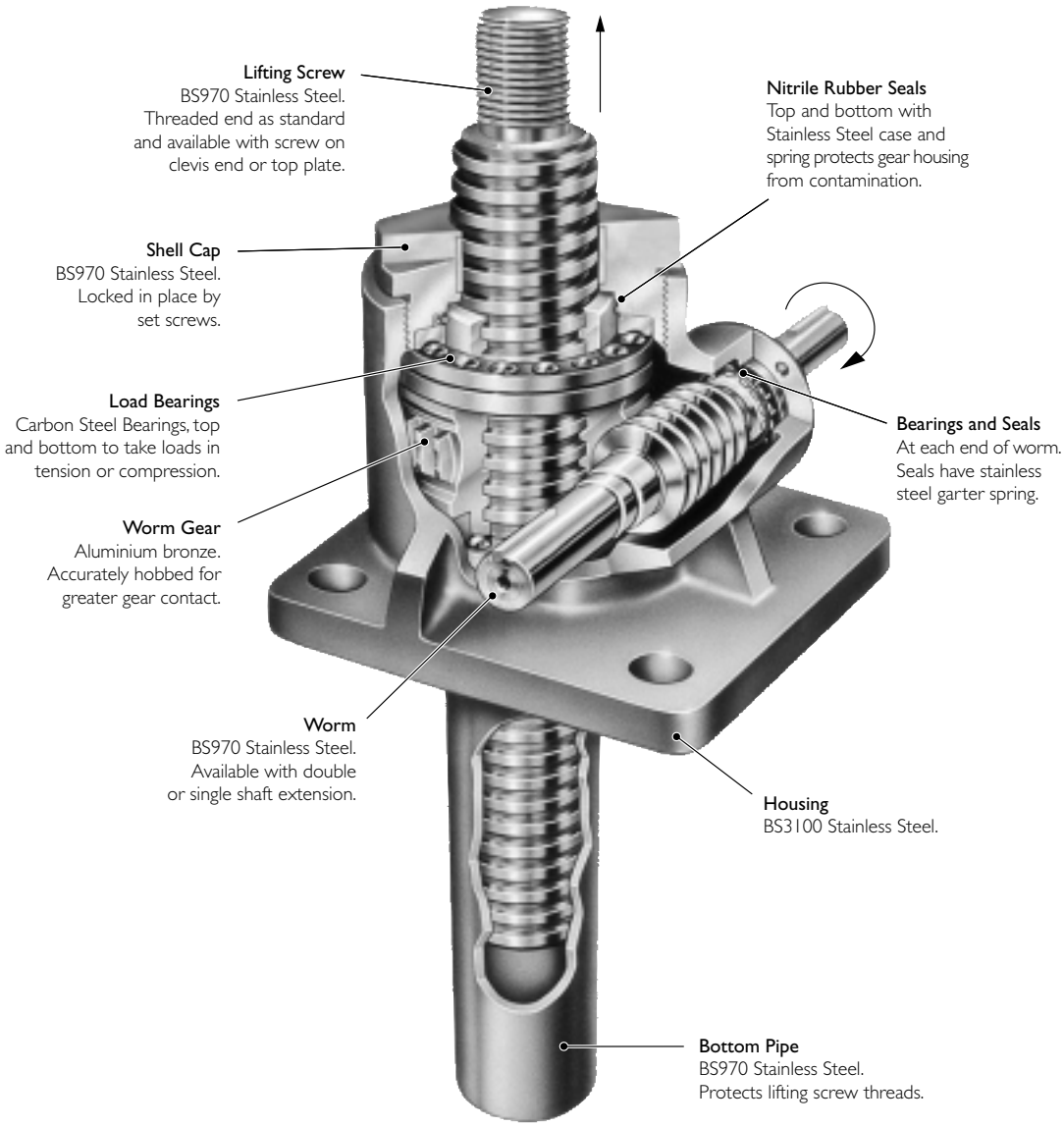

For other stainless steel variants and other capacities (5 kN, 500 kN & 1000 kN) consult Power Jacks Ltd.

The stainless steel actuators are ideal for use in harsh or corrosive environments such as food processing or paper making machinery where standard materials may be inadequate.

1.2.4.1. Performance of Standard Metric Stainless Steel Actuators

Actuator Model		S 2501	S 1802	S 1805	S 1810	S 1820	S 1830
Metric Actuator Base Model Rating (kN)		10	25	50	100	200	300
Sustaining Capacity (kN) ¥	Tension	6.6	16.5	33	66	132	200
	Compression	10	25	50	100	200	300
Operating Capacity (kN) ‡		3.3	8.25	16.5	33	66	100
Lifting Screw *	Diameter	20 mm	30 mm	40 mm	55 mm	65 mm	95 mm
	Pitch	5 mm	6 mm	9 mm	12 mm	12 mm	16 mm
Worm Gear Ratios	Standard	5:1	6:1	6:1	8:1	8:1	10 2/3
	Optional	20:1	24:1	24:1	24:1	24:1	32:1
Turn of worm for raise of lifting screw	Standard	1 for 1 mm	1 for 1 mm	1 for 1.5 mm	1 for 1.5 mm	1 for 1.5 mm	1 for 1.5 mm
	Optional	4 for 1 mm	4 for 1 mm	4 for 1.5 mm	2 for 1 mm	2 for 1 mm	2 for 1 mm
Maximum Input Power per Actuator (kW)	Standard	0.375	1.5	3.0	3.75	3.75	6.0
	Optional	0.19	0.375	0.55	1.125	1.125	1.9
Start-Up Torque at full operating capacity (Nm) †	Standard	2.3	6.5	18.5	38.2	87	160
	Optional	1.0	2.9	8.4	19.9	45	95
Weight with base raise of 150mm (kg)		2.27	8.17	15.88	24.72	45	86
Weight for each additional 25mm raise (kg)		0.13	0.21	0.32	0.57	0.86	1.58

¥ *Sustaining capacity for tension is less than actuator rating due to the performance of the stainless steel lifting screw. If a tension sustaining capacity is required equal to the actuator rating consult Power Jacks Ltd.*

‡ *Operational rating is less than sustaining rating due to the performance of stainless steel worm shafts. If a operating capacity is required equal to sustaining capacity consult Power Jacks for worm shaft options such as Chrome or Electroless-Nickel plating.*

* *All metric stainless steel machine screws have a trapezoidal thread form, single start as standard.*

† *For loads of 25% to 100% of actuator capacity, torque requirements are approximately proportional to the load.*

Metric Stainless Steel Actuator Efficiencies

Standard Gear Ratio

Model		S 2501	S 1802	S 1805	S 1810	S 1820	S 1830
Gear Ratio		5	6	6	8	8	10.66
Actuator Static Efficiency	1 Start	0.233	0.201	0.213	0.206	0.181	0.149
Actuator Dynamic Efficiency	1 Start	0.306	0.264	0.281	0.272	0.242	0.205

Optional Gear Ratio

Model		S 2501	S 1802	S 1805	S 1810	S 1820	S 1830
Gear Ratio		20	24	24	24	24	32
Actuator Static Efficiency	1 Start	0.130	0.115	0.117	0.132	0.116	0.084
Actuator Dynamic Efficiency	1 Start	0.194	0.167	0.172	0.190	0.169	0.128

Note *Efficiency values for standard grease lubricated worm gear box and lifting screw.*
External dimensions same as for Metric Machine Screw Actuators

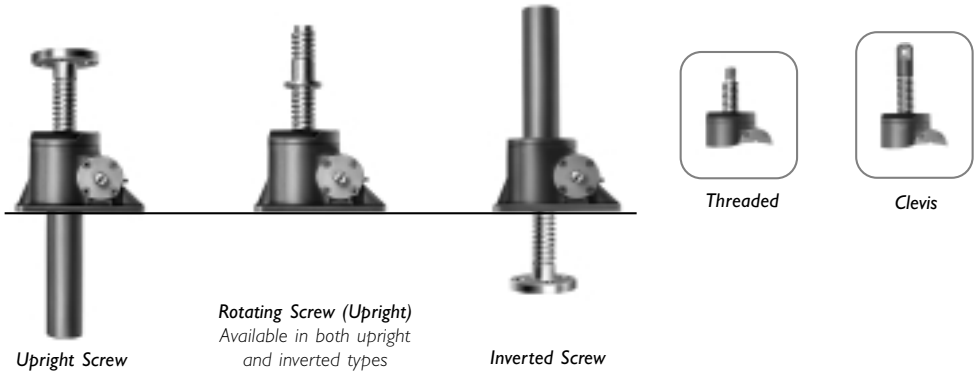

1.2.5. M-Series Imperial Stainless Steel Machine Screw Jacks

Advantages

- Capacity from 2 Tons through to 100 Tons.
- Worm gear ratios from 6:1 to 36:1
- Corrosion resistant.
- Stainless steel hardware.
- Sealed gear cavity keeps water and other contaminants out.
- Anti-Backlash models available.
- Available with keyed lifting screws for translating screw models.
- Available in upright and inverted rotating screw models with travelling nut.
- Can be retrofitted into applications where Duff-Norton non-stainless steel actuators have been previously used.

Optional Features

- Closed heights
- Materials
- Lifting screw ends
- With Stop Nuts
- Worm shaft extensions
- With bellows boots
- Lifting screw thread pitches

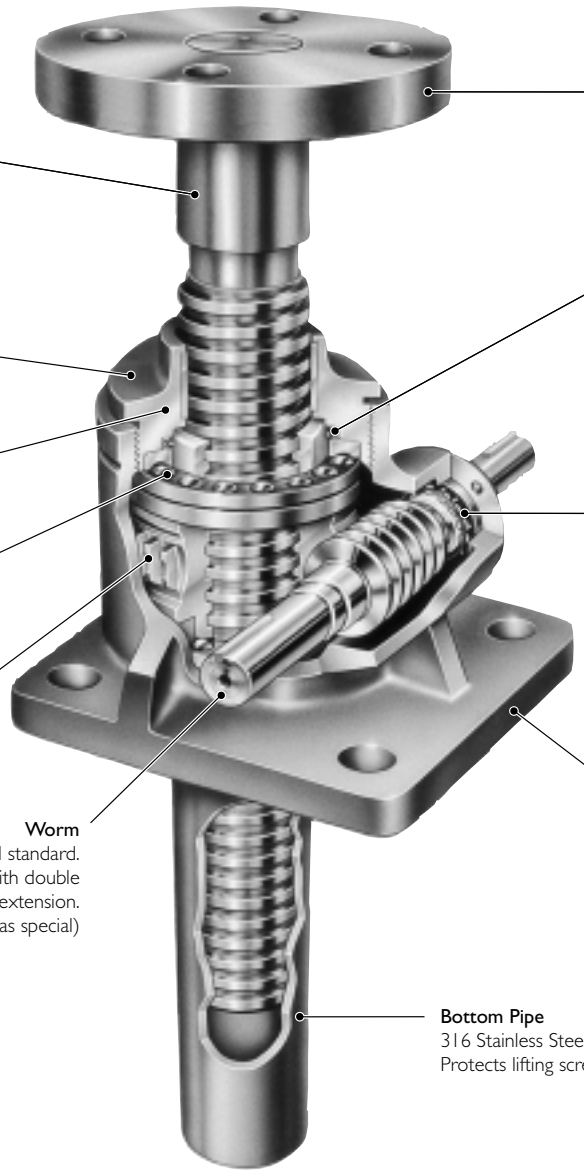

1.2.5.1. Performance of Standard Imperial Stainless Steel Actuators

Actuator Model	Upright	SM-1802	SM-1805	SM-1810	SM-1815	SM-1820	SM-1825	SM-9035	SM-1850	SM-1899
	Inverted	SM-1801	SM-1804	SM-1809	SM-1814	SM-1819	SM-1824	SM-9034	SM-1849	SM-1898
Capacity (Short Tons)	Sustaining	2	5	10	15	20	25	35	50	100
	Operating**	0.66	1.66	3.33	5.00	6.66	8.33	11.66	16.66	33.33
Lifting Screw	Diameter	1	1 1/2	2	2 1/4	2 1/2	3 3/8	3 3/4	4 1/2	6
	Pitch	0.250	0.375	0.500	0.500	0.500	0.666	0.666	0.666	0.750
	Form	Acme	Square	Square	Square	Square	Square	Acme	Square	Square
Worm Gear Ratios	Std. Ratio	6:1	6:1	8:1	8:1	8:1	10 2/3:1	10 2/3:1	10 2/3:1	12:1
	Optional	24:1	24:1	24:1	24:1	24:1	32:1	32:1	32:1	36:1
Turns of Worm for 1" Raise	Std. Ratio	24	16	16	16	16	16	16	16	16
	Optional	96	64	48	48	48	48	48	48	48
Max. HP per Actuator	Std. Ratio	2	4	5	5	5	8	8	15	25
	Optional	1/2	3/4	1 1/2	1 1/2	1 1/2	2 1/2	2 1/2	6	11
Start-Up Torque at Operating Load* (In.-lbs)	Std. Ratio	40	150	250	475	685	665	1335	2500	5335
	Optional	17	60	135	275	390	400	800	1400	2865
Efficiency Rating	Std. Ratio	0.232	0.221	0.237	0.202	0.188	0.164	0.156	0.138	0.130
	Optional	0.133	0.121	0.151	0.129	0.120	0.092	0.089	0.083	0.080
Weight with Base Raise of 6" (lbs)		19	37	55	70	96	168	250	420	1260

* *For Loads 25% to 100% of actuator capacity, torque requirements are approximately proportional to load.*

** *Actuator has been de-rated for 316 Stainless Steel worm. For full load rating use 17-4 PH worm.*

1.2.5.2. Standard Stainless Steel Actuators Screw End Dimensions

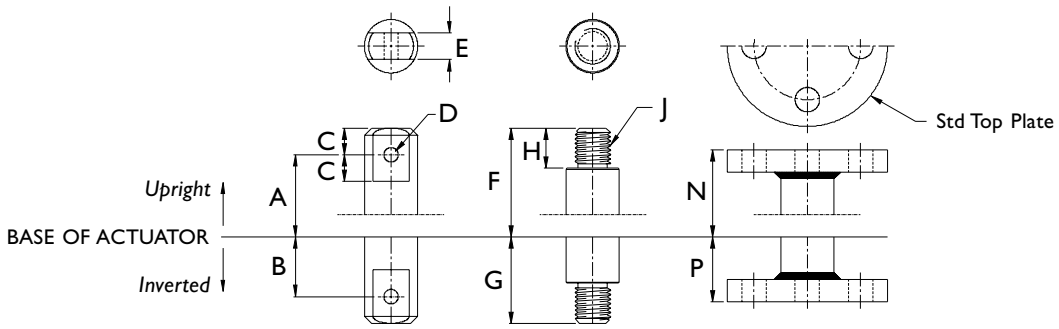

Model No	A*	B*	C	D	E	F	G	H	J	N	P
SM-1802	5 1/4"	1 3/4"	3/4"	13/32"	3/4"	6.0	2 1/2"	1 1/8"	3/4"-10-UNC-2A	5.25	1 3/4"
SM-1805	7"	2 1/2"	1"	21/32"	1"	8.0	3 1/2"	1 1/8"	1"-8-UNC-2A	7.5	2 1/2"
SM-1810	7 1/2"	3"	1 1/4"	25/32"	1 1/4"	9.25	4 1/4"	1 5/8"	1 1/2"-6-UNC-2A	7.75	2 3/4"
SM-1815	8 1/2"	3"	1 1/4"	29/32"	1 1/2"	10.25	4 1/4"	2"	1 3/4"-5-UNC-2A	8.5	2 3/4"
SM-1820	10"	3 1/2"	1 1/2"	1 1/32"	1 3/4"	12.5	5"	2 1/4"	2"-4 1/2-UNC-2A	10.25	3"
SM-1825	12"	4"	1 3/4"	1 9/32"	2 1/4"	14.5	5 3/4"	3 1/4"	2 1/2"-4-UNC-2A	11.75	3"
SM-9035	13"	5"	2"	1 17/32"	2 1/2"	15.5	7"	3 3/4"	3 1/4"-4-UNC-2A	12.5	4"
SM-1850	15"	5 1/2"	2 1/2"	1 21/32"	3 1/4"	18.0	8"	4 1/4"	4"-4-UNC-2A	13.5	3 1/2"
SM-1899	24"	9"	3"	2 17/32"	4 1/4"	25.0	12"	5"	4 1/2"-12-UNC-2A	24.0	12"

Note
1. ** Closed height dimensions may increase for actuator units supplied with bellows boots. Consult Power Jacks Ltd.*
2. *Lifting screw listed above are not keyed. Must be held to prevent rotation.*
3. *Keyed lifting screws and keyed anti-backlash models are also available. Consult Power Jacks Ltd.*
4. *All dimensions in inches.*
5. *Dimensions are subject to change without notice.*

1.2.5.3 Imperial Stainless Steel Actuator Dimensions

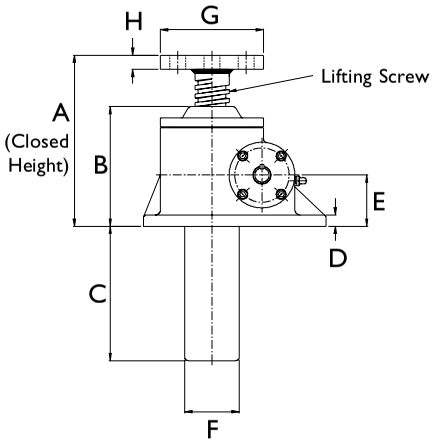

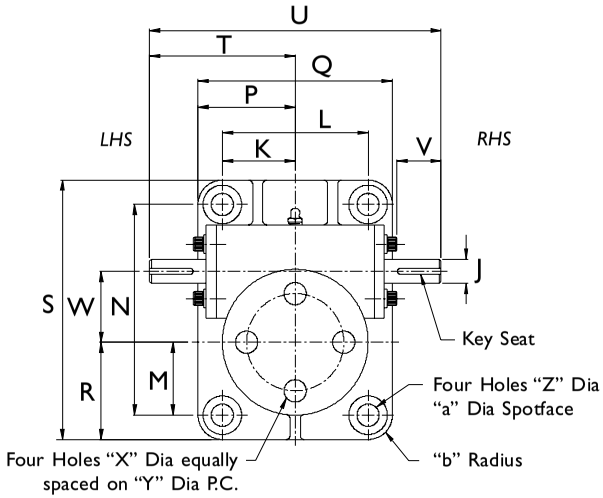

Model 1899 (100 Ton) Mounting Hole Pattern

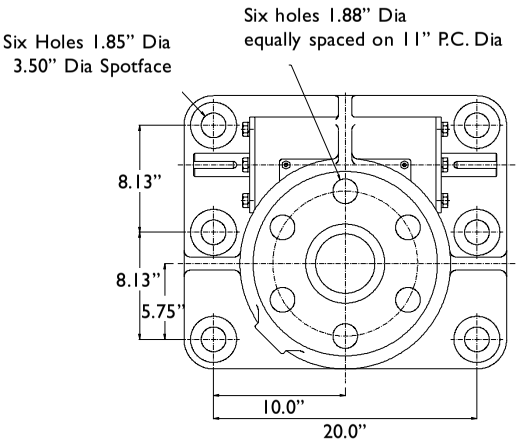

Model No	Capacity (Short Tons) Sustaining	Capacity (Short Tons) Operating	A	B	C	D	E	F	G	H	J	K	L	M	N	P	Q	R	S	T	U	V	W	X	Y	Z	a	b	Keyseat (b x h x L)
SM-1802	2	0.66	5.50	4.56	Travel	.50	1.750 ±.005	1.66	4.25	.50	.500 +.000 -.002	3.00	6.00	1.00	2.00	3.5	7.00	1.75	3.5	3.5	7.00	1.12	1.702 +.003 -.000	.41	3.00	.41	.75	1.5	.125 x 0.060 x 1.00 LG
SM-1805	5	1.66	7.50	5.88	Travel +3/8	.50	2.250 ±.005	2.38	4.50	.60	.749 +.000 -.002	2.25	4.50	2.25	6.50	3.00	6.00	3.00	8.00	4.50	9.00	1.50	2.188 +.003 -.000	.69	3.00	.69	1.19	.75	.188 x .094 x 1.25 LG
SM-1810	10	3.33	7.75	6.00	Travel +1/4	.50	2.250 ±.005	2.88	5.75	.94	1.000 +.000 -.002	2.88	5.75	2.00	7.00	3.75	7.50	2.88	8.75	5.50	11.00	1.80	2.598 +.003 -.000	.81	4.13	.81	1.31	.88	.250 x .125 x 1.50 LG
SM-1815	15	5.00	8.00	6.31	Travel +1/2	.63	2.750 ±.005	2.88	5.75	.94	1.000 +.000 -.002	3.00	6.00	2.50	7.50	3.88	7.75	3.38	9.25	5.50	11.00	1.80	2.598 +.003 -.000	.81	4.13	.81	1.38	.88	.250 x .125 x 1.50 LG
SM-1820	20	6.66	10.25	8.00	Travel -1/4	.75	3.250 ±.005	3.50	5.75	.94	1.000 +.000 -.002	3.00	6.00	3.00	8.75	4.13	8.25	4.13	11.00	5.50	11.00	1.50	2.598 +.003 -.000	.81	4.13	1.12	1.75	1.13	.250 x .125 x 1.50 LG
SM-1825	25	8.33	11.75	9.75	Travel +1/4	1.00	4.000 ±.005	4.50	8.50	.94	1.375 +.000 -.002	3.75	7.50	3.75	11.00	5.13	10.25	5.13	13.75	7.00	14.00	2.30	3.750 +.003 -.000	1.06	6.00	1.38	2.13	1.38	.313 x .156 x 2.00 LG
SM-9035	35	11.66	12.50	9.56	Travel +1/4	1.25	4.000 ±.005	4.50	10.50	1.31	1.375 +.000 -.002	3.75	7.50	4.50	12.50	5.13	10.25	6.00	15.50	7.00	14.00	2.10	3.750 +.003 -.000	1.62	7.75	1.62	2.63	1.38	.313 x .156 x 2.00 LG
SM-1850	50	16.66	13.50	11.38	Travel	1.25	4.750 ±.005	5.63	11.25	1.25	1.500 +.000 -.002	8.00	16.00	3.00	6.00	9.88	19.75	4.88	9.75	11.00	22.00	4.40	5.313 +.003 -.000	1.38	8.75	1.88	3.25	1.88	.375 x .188 x 2.25 LG
SM-1899	100	33.33	24.00	18.50	Travel +1/2	1.50	6.000 ±.005	7.00	14.00	2.94	1.750 +.000 -.002	*	*	*	*	12.25	24.50	8.00	20.75	11.50	23.00	3.40	7.500 +.003 -.000	*	*	•	*	*	.500 x .250 x 3.00 LG

Note:
1. *Dimensions are subject to change without notice.*
2. *For models SM1802 and SM-1850 style as per section 1.2.3.2.*
3. *Dimensions in inches.*
4. *LHS = Left Hand Side*
5. *RHS = Right Hand Side*

1.2.6. Micro Miniature Actuator

Patent Numbers:
3,220,277 and
3,323,777

Manual operation is accomplished with an easy to use hand knob. The dial indicator is protected by a removable clear plastic cover.

Dial indicators available on request. Indicate preference when ordering:

- Dial SK-3554-46
  Balanced dial reading 0 → 50 → 0 inches with 0.001" graduations with revolution counter.
- Dial SK-3554-83
  Continuous dial reading 0 → 100 inches in 0.001" graduations with revolution counter.
- Metric Dial
  Dial readings with 0 → 50 → 0mm or 0 →100mm with 0.01mm graduations with revolution counter.

  (Type of dial must be specified as above when ordering the actuator)
- Actuates up to 450 kg (1,000 lb).
- Allows for extremely fine adjustment.
- Equipped with anti-backlash nuts to minimise vertical backlash between lifting screw and worm gear nut.
- Standard model has anodised aluminium shell cap and housing with stainless steel worm and lifting screws.
- Stainless Steel option has sealed 316 stainless steel shell cap, housing, worm and lifting screw.

Note *The load bearings and worm bearings inside stainless steel actuators are not stainless steel.*

1.2.6.1. Micro Miniature Actuator Specification

Model	Rated Capacity		Screw Dia.	Turns of Worm for 1/2" Raise	Lifting Torque at Full Load		Worm Gear Ratio	Weight		Shell Cap & Housing
	(kg)	(lb)	(inch)		Nm	in.lb		(kg)	(lb)	
M-3554-30	225	500	0.500	500	1.36	12	20:1	0.91	2	Aluminium
M-3554-27	450	1000	0.625	500	2.03	18	20:1	0.91	2	Aluminium
M-3554-136	450	1000	0.625	500	2.03	18	20:1	1.36	3	Stainless Steel

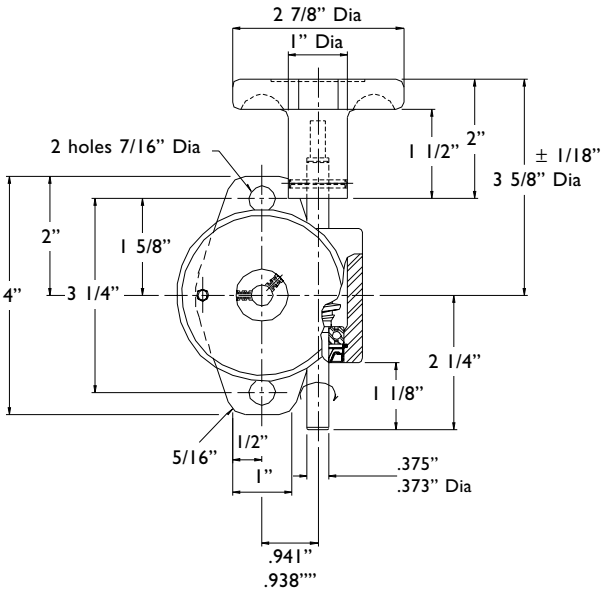

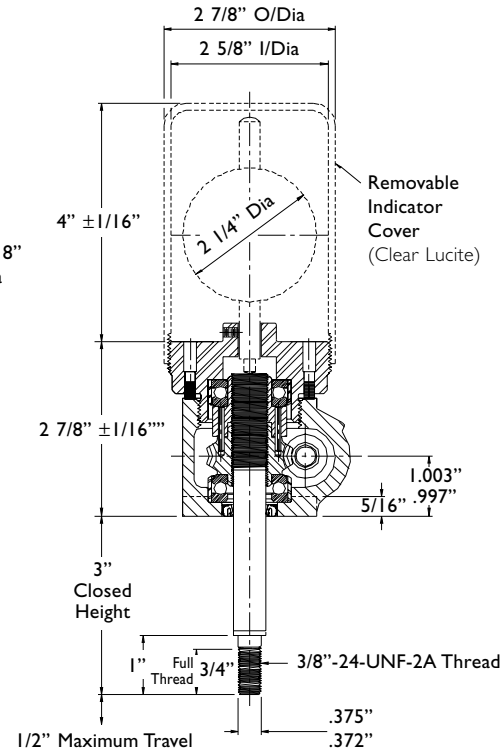

Note 1. *All dimensions in inches unless otherwise stated.*
2. *Dimensions are subject to change without notice.*

1.3. Ball Screw Actuator

1.3.1. E-Series Metric Ball Screw Jacks

Advantages

- Move Loads and apply force more efficiently than other mechanical actuators.
- Permit faster operation and longer life under load.
- Require less power by providing positive mechanical action.
- Permit synchronisation of multiple units.
- Capacity from 10 kN → 500 kN.
- Handles full load in tension or compression.
- 40 models available.
- Integral ball screw safety device.

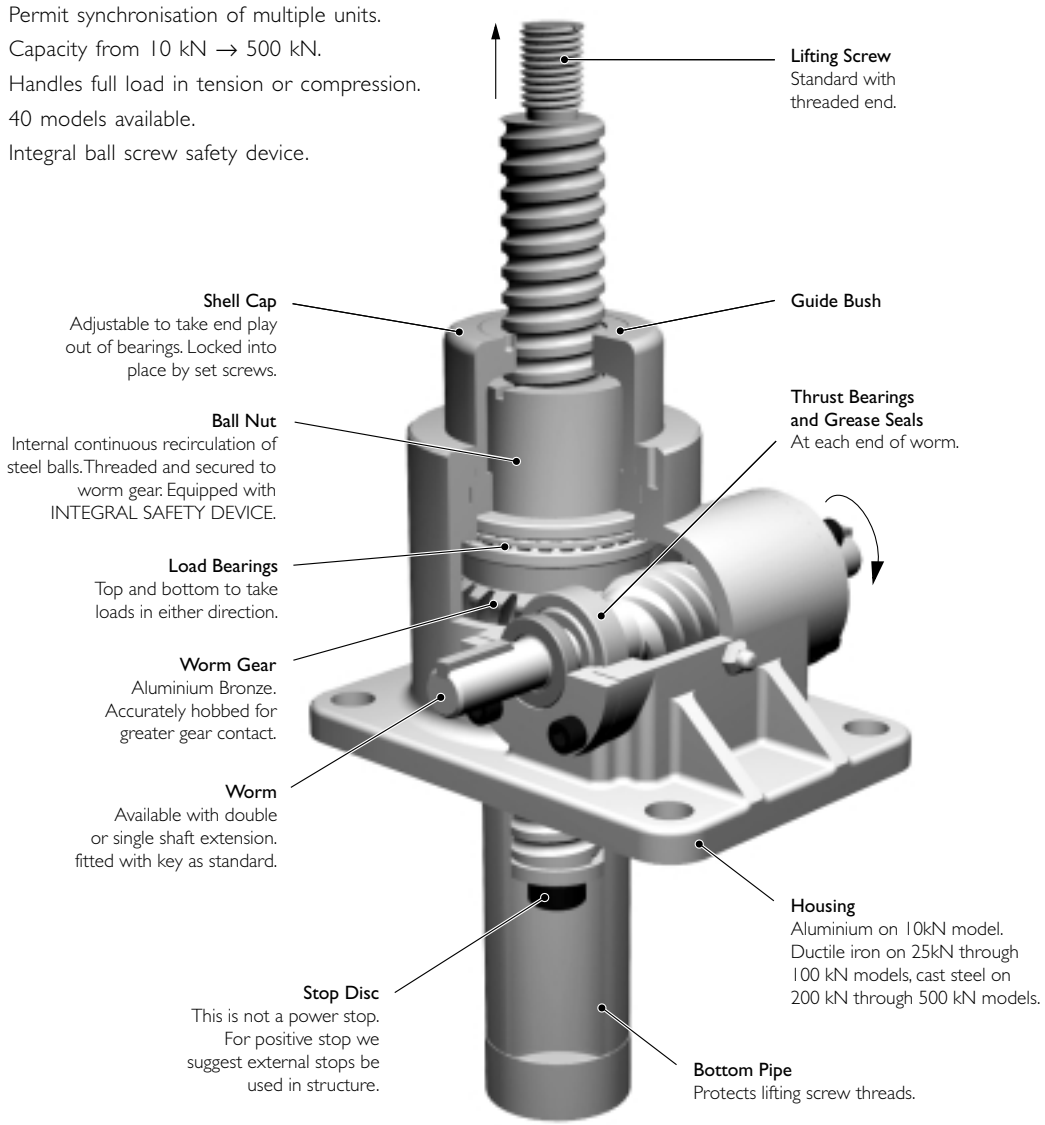

The metric ball screw gives you a single-package, positive action linear actuator that can be driven by an electric, air or hydraulic motor. A ball-bearing type heat-treated screw and mating nut with rolling contact reduces friction to a bare minimum in converting torque to thrust. Overall operating efficiency is as high as 70% in some models, depending on the worm gear ratio.

Metric ball screw actuators are available as translating or rotating screws in either upright or inverted configurations. In the translating screw type, the ball nut is fixed to the gear and the lifting screw moves up and down through the nut. In the rotating screw type, the screw is fixed to the gear and the ball nut travels along the screw.

Depending on size and type of load, models are available with raises up to 3 metres. Raises up to 6 metres are available on request. Metric ball screw actuators may be used individually, in tandem or in multiple arrangements. Special models are available and there is no extra charge for single ended worm shafts extensions.

Metric Ball Screw Actuator Models

Features

- **Integral Safety Device** - All Power Jacks Metric ball screw actuator except Model E28501 have an integral safety device as standard. This provides two important safety roles: (a) wear indicator and (b) sustain the load in the unlikely event of catastrophic ball failure. For further details refer to section 1.3.1.1.2.
- **High Speed** - Low friction permits linear motion in some models up to 6 $^{m}/_{min}$ at 1800 rpm worm shaft speeds, providing maximum power ratings are not exceeded.
- **Precise Positioning** - Can be controlled accurately for positioning within hundredths of a millimetre.
- **Positive Action** - Operates with a high degree of reliability, without the need for costly pumps, hoses or valves.
- **Uniform Lifting Speed** - Highly efficient design means less power is needed to achieve a given thrust; power needs are as much as two-thirds that of machine screw actuators, with savings in motors, couplings, reducers, shafting and controls.
- **Long-Life** - Low friction means longer operating life.
- **Low Power Usage** - Highly efficient design means less power is needed to achieve a given thrust; power needs are as much as two-thirds that of machine screw actuators.
- **Internal Recirculating Balls** - For smooth movement, less turns per circuit and absence of parts liable to wear.

Options

- **2 Standard Gear Ratios.**
- **2 Ball Screw Lead Options as Standard** - Other leads are available on request.
- **Pre-Loaded Ball Screw** - These ball screw assemblies give zero linear backlash (available on request).
- **Anti-Rotation Device** - Stops a translating screw from rotating when the screw end is free.
- **Bellows Boot Option** - Protects the screw from dust, dirt, moisture and corrosive contaminants.
- **Secondary Guide Option** - Increases a lifting screw lateral rigidity aiding screw guidance and improved side load resilience.
- **Double Clevis End Option** - Incorporates a special clevis end bottom pipe and a standard clevis end on the lifting screw.

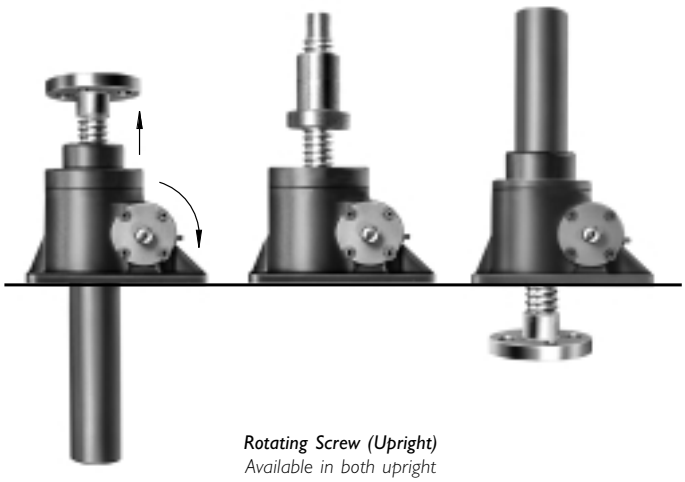

Upright Screw

Rotating Screw (Upright)
Available in both upright and inverted types

Inverted Screw

Clevis

Threaded

Note *Clockwise rotation of worm raises load on all models - counter clockwise available at extra charge.*
Unless a translating screw has an anti-rotation device, the lifting screw end should be bolted to the lifting member to prevent the screw from rotating.
Actuators are equipped with "Alemite" grease fittings.
Recommended lubricants are listed in the installation and maintenance instructions.
Actuators supplied complete with drive shaft keys.

Attachments

IEC and NEMA flange, motors, gearboxes, reducers and couplings available for single actuator drive or multiple actuator arrangements (refer 4, 6, 7 and 8).

Motion control components include electronic motion controllers, motor drives, operator interfaces, encoders, limit switches, potentiometers and meters with LCD display (refer 8).

1.3.1.1. Performance of Standard E-Series Metric Ball Screw Jacks

Actuator Model		E28501	E2802		E2805		E2810		E2820		E2830	E2860
Capacity (kN)		10	25		50		100		200		300	500
Lifting Screw	Diameter	20 mm	25 mm		40 mm		50 mm		63 mm		80 mm	Available on Request
	Pitch	5 mm	5 mm	10mm	10 mm	20mm	10 mm	20mm	10 mm	20mm	20 mm	
Worm Gear Ratios	Standard	5	6:1		6:1		8:1		8:1		10 2/3	
	Optional	20	24:1		24:1		24:1		24:1		32	
Turn of worm for Raise of Lifting Screw	Standard	10 for 10 mm	12 for 10 mm	6 for 10 mm	6 for 10 mm	3 for 10 mm	8 for 10 mm	4 for 10 mm	8 for 10 mm	4 for 10 mm	5.33 for 10 mm	
	Optional	40 for 10 mm	48 for 10 mm	24 for 10 mm	24 for 10 mm	12 for 10 mm	24 for 10 mm	12 for 10 mm	24 for 10 mm	12 for 10 mm	16 for 10 mm	
Maximum Input Power per Actuator (kW)	Standard	0.375	1.5		3		3.75		3.75		6	
	Optional	0.18	0.375		0.55		1.125		1.125		1.9	
Start-Up Torque at full Load (Nm) †	Standard	2.7	5.9	11.1	23.4	44.6	36.4	68.5	75.2	139.4	182	
	Optional	1.2	2.6	4.9	10.7	20.4	19.1	35.8	39.4	72.9	107.3	
Weight with base raise of 150mm (kg)		2.8	8.17		15.88		24.72		45		86	
Weight for each additional 25mm raise (kg)		0.08	0.21		0.32		0.57		0.86		1.58	

† *For loads of 25% to 100% of actuator capacity, torque requirements are approximately proportional to the load.*

1.3.1.1.1. Metric Ball Screw Actuator Efficiencies

Standard Gear Ratio

Actuator Model	E28501	E2802		E2805		E2810		E2820		E2830	E2860
Gear Ratio	5	6		6		8		8		10 2/3	Available on Request
Lifting Screw Lead (mm)	5	5	10	10	20	10	20	10	20	20	
Actuator Static Efficiency	0.603	0.565	0.600	0.567	0.595	0.546	0.581	0.529	0.571	0.492	
Actuator Dynamic Efficiency	0.681	0.662	0.692	0.663	0.687	0.645	0.674	0.631	0.665	0.595	

Optional Gear Ratio

Actuator Model	E28501	E2802		E2805		E2810		E2820		E2830	E2860
Gear Ratio	20	24		24		24		24		32	Available on Request
Lifting Screw Lead (mm)	5	5	10	10	20	10	20	10	20	20	
Actuator Static Efficiency	0.341	0.320	0.340	0.310	0.325	0.348	0.370	0.337	0.364	0.278	
Actuator Dynamic Efficiency	0.429	0.419	0.438	0.407	0.422	0.450	0.470	0.440	0.465	0.371	

Note *Efficiency values for standard grease lubricated worm gear box and lifting screw.*

1.3.1.1.2. Ball Nut Design

Power Jacks ball nut employs the internal ball transfer system for recirculating the balls. This design provides for:

- Robust design.
- Small ball nut body outer diameter.
- Smooth movement.
- Less turns per circuit.
- Absence of parts liable to wear.

For standard units the single liner, single circuit transfer system is used e.g.

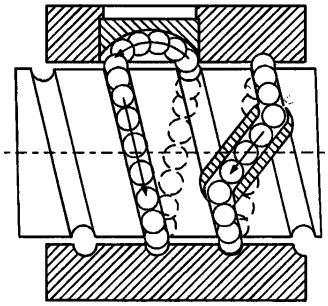

1.3.1.1.2.1. Integral Safety Device

All Power Jacks metric ball screw actuators have an integral safety device as standard. This provides two important safety roles:

1. In the unlikely event of an excessive wear in the ball screw drive, the safety device will contact the screw shaft, and act as an "ACME" Thread. This will provide early warning of any possible ball screw failure, and is capable of providing drive in the event of any such failure. This can allow a control system to alert an operator to wear of this kind by monitoring the increase in motor current required to drive the system due to the increased friction generated by the device.
2. It allows the ball nut on the actuator to sustain a load in the event of catastrophic ball failure. The safety of industrial and human cargo is therefore improved. Ball screw systems without this device could collapse under load or drop the carried load.

Note: *Model 5501 ball screw actuator does not have safety device as standard if required consult Power Jacks Ltd.*

1.3.1.1.2.2. Sealing

On metric ball screw actuators solid formed nylon wiper seals on the ball nut prevents ingress of foreign matter and retain lubrication within the nut.

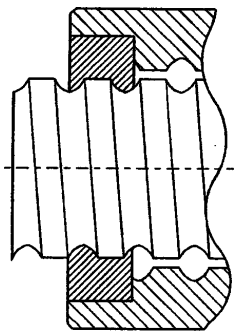

1.3.1.1.2.3. Preloaded for Reduced Axial Backlash

Power Jacks Metric Ball Screw Actuators can be provided with preloaded ball nuts to give reduced axial backlash as a high efficiency alternative to the metric machine screw anti-backlash option. The preloading on the ball nut is obtained by the "Interference Ball" method. By fitting interference balls in the ball nut to obtain a diametral interference fit and using the ogival track form, a four-point contact results e.g.

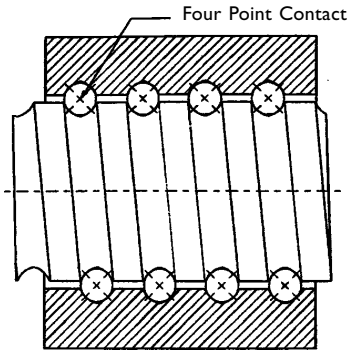

1.3.1.1.3. Ball Screw Life

Theoretical service life can be expressed in either L_{10} 10^6 revolutions or $L_h 10^3$ hours or L_d kilometres. As the life of a ball screw is determined by metal fatigue it is not possible to accurately predict life. However, it is practical to suppose that 90% of a sufficiently large number of equally sized ball screws running under equal working conditions will reach L_{10} or L_h without evidence of material fatigue.

The L_{10} ball screw life is rated using the Dynamic Capacity, which is the maximum constant axial load that can be applied in running conditions for a life of 1.10^6 revolutions of the ball screw. This can be expressed in linear travel (L_d).

$$L_d = L_{10} * P$$

Where L_{10} = Service Life (millions of revolutions)
L_d = Service Life (km)
P = Pitch of Ball Screw (mm)

Linear Travel L_d in km			Working Load (kN)										
Actuator Model	Actuator Rating (kN)	Actuator Pitch (mm)	5	10	25	30	50	75	100	150	200	250	300
E28501	10	5	20.5	2.5	-	-	-	-	-	-	-	-	-
E2802	25	5	381	48	3	-	-	-	-	-	-	-	-
E28021	25	10	1 775	222	14	-	-	-	-	-	-	-	-
E2805	50	10	11 978	1 497	96	55	12	-	-	-	-	-	-
E28051	50	20	17 039	2 130	136	79	17	-	-	-	-	-	-
E2810	100	10	32 287	4 036	258	149	32	10	4	-	-	-	-
E28101	100	20	38 503	4 813	308	178	39	11	5	-	-	-	-
E2820	200	10	162 327	20 291	1 299	752	162	48	20	6	3	-	-
E28201	200	20	320 060	40 008	2 560	1 482	320	95	40	12	5	-	-
E2830	300	30	903 882	112 985	7 231	4 185	904	268	113	33	14	7	4

Use the following formulae to calculate the service life in terms of hours running:

$$L_h = \frac{L_{10} * Gr}{60 * n_m}$$

Where L_h = Service Life (hours)
L_{10} = Service Life (revolutions)
n_m = Mean Actuator Input Speed (rpm)
Gr = Actuator Gear Ratio

Note: *Ball screw life based on dynamic load calculated according to DIN69051 Part 4.*

1.3.1.2. Metric Ball Screw Actuator Dimensions

1.3.1.2.1. Standard Metric Translating Screw Actuators

Upright

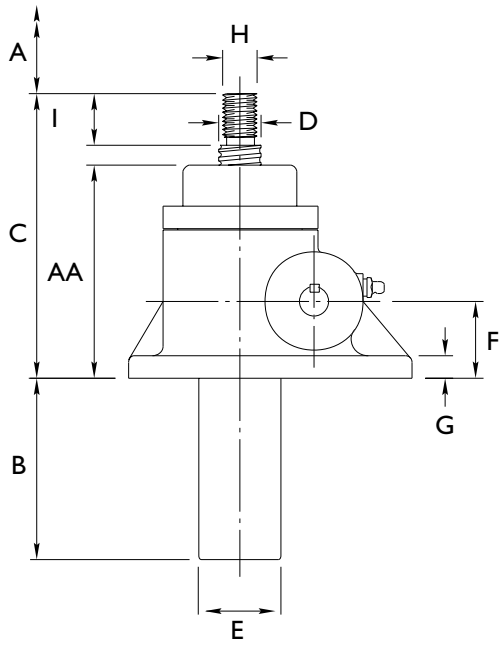

Inverted

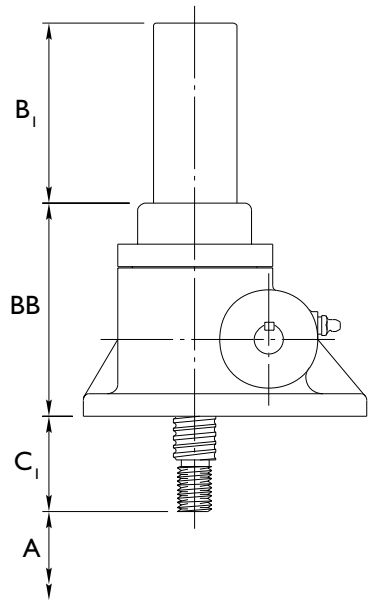

Plan View

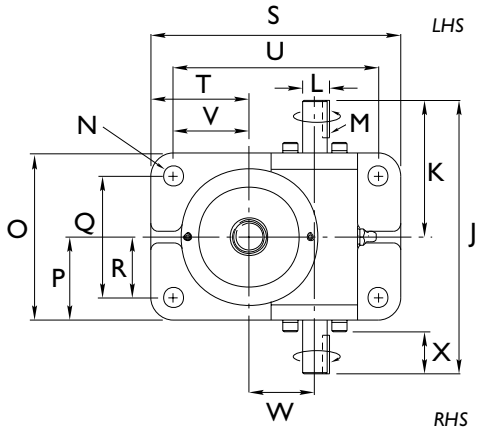

Models:
2802, 28021, 2805, 28051, 2810, 28101, 2820, 28201, 2830, 2860.

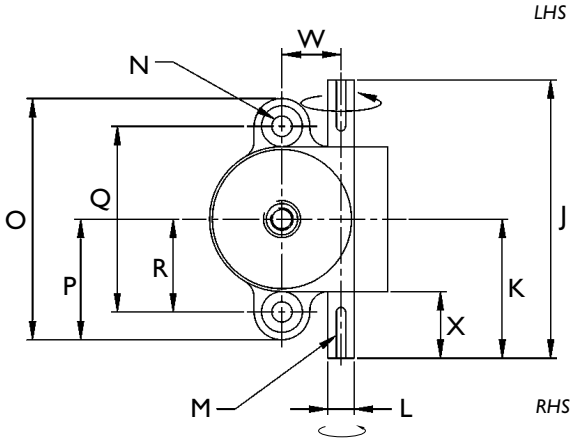

Model:
28501

Note
1. *All dimensions in mm.*
2. *Dimensions are subject to change without notice.*
3. *LHS = Left Hand Side*
4. *RHS = Right Hand Side*

Model	Upright	E28501	E2802	E28021	E2805	E28051	E2810	E28101	E2820		E2830	E2860
	Inverted	E28500	E2801	E28011	E2804	E28041	E2809	E28091	E2819		E2829	E2859
Capacity (kN)		10	25		50		100		200		300	500
A		Raise As Required										
B		A + 35	A + 10		A + 10		A + 15		A + 10		A + 30	Available on Request
B1		A + 35	A + 25		A + 25		A + 25		A + 25		A + 25	
C		150	165	185	215	255	245	275	313	351	445	
C1		45	55		65		80		95		115	
D		20	25		40		50		63		80	
E		42	48.3		60.3		73		89		115	
F		40 ± 0.13	45 ± 0.13		60 ± 0.13		60 ± 0.13		85 ± 0.13		105 ± 0.13	
G		9	13		14		16		20		30	
H		M12 X 1.75	M20 X 2.5		M24 X 3		M36 X 4		M48 X 5		M72 X 4	
I		24	30		35		40		55		65	
J		150	180		230		280		300		380	
K		75	90		115		140		150		190	
L		Ø14 h8	Ø16 h8		Ø19 h8		Ø25 h8		Ø28 h8		Ø35 h8	
M		5 X 5 X 25	5 X 5 X 25		6 X 6 X 32		8 X 7 X 40		8 X 7 X 40		10 X 8 X 50	
N		11	13.5		18		22		26		39	
O		130	110		150		190		210		260	
P		65	55		75		95		105		130	
Q		100	80		115		145		150		190	
R		50	40		57.5		72.5		75		95	
S		-	165		205		225		275		365	
T		-	65		75		75		105		140	
U		-	135		170		180		215		295	
V		-	50		57.5		52.5		75		105	
W		31.75 + 0.076 - 0.000	43.26 + 0.025 - 0.025		55.58 + 0.050 - 0.000		66 + 0.060 - 0.000		66 + 0.070 - 0.000		95.25 + 0.130 - 0.000	
X		36	27.5		35		44		44		56	
AA		114	124	144	169	209	190	220	243	281	360	
BB		114	124	144	169	209	190	220	243	281	360	

1.3.1.2.2. Standard Translating Ball Screw Ends

Top Plate

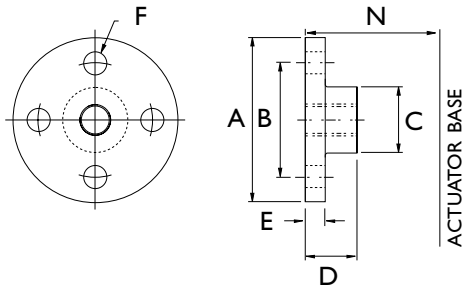

Clevis End

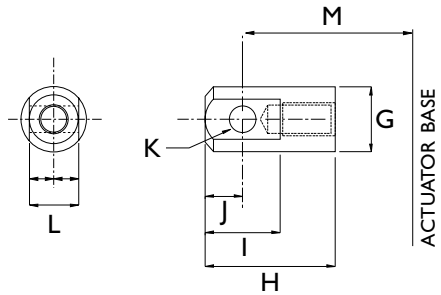

Model		E28501	E2802	E28021	E2805	E28051	E2810	E28101	E2820	E28201	E2830	E2860
A		Ø80	Ø100		Ø120		Ø150		Ø170		Ø240	Ø280
B		P.C.D. 55	P.C.D. 70		P.C.D. 85		P.C.D. 110		P.C.D. 120		P.C.D. 170	P.C.D. 215
C		Ø30	Ø40		Ø50		Ø65		Ø75		Ø110	Ø150
D		24	31.5		36.5		42		58		67	92
E		10	12		16		20		25		30	35
F		Ø11	Ø13.5		Ø18		Ø22		Ø26		Ø33	Ø33
G		Ø30	Ø40		Ø50		Ø65		Ø75		Ø110	Ø150
H		63	79.5		91.5		120		143		167	217
I		36	46		60		66		80		120	150
J		18	23		30		33		40		60	75
K		Ø12	Ø16		Ø20		Ø22		Ø30		Ø45	Ø60
L		20	30		35		40		50		80	110
M	Upright	150	191.5	211.5	241.5	281.5	292	322	361	399	485	Available on request
	Inverted	45	81.5	81.5	91.5	91.5	127	127	143	143	155	
N	Upright	170	166.5	186.5	216.5	256.5	247	277	316	354	445	
	Inverted	65	56.5	56.5	66.5	66.5	82	82	98	98	115	

1.3.1.2.3. Standard Rotating Ball Screw Actuators

For other dimensions and performance data refer to translating actuators.

1.3.1.2.3.1. Upright Rotating Ball Screw

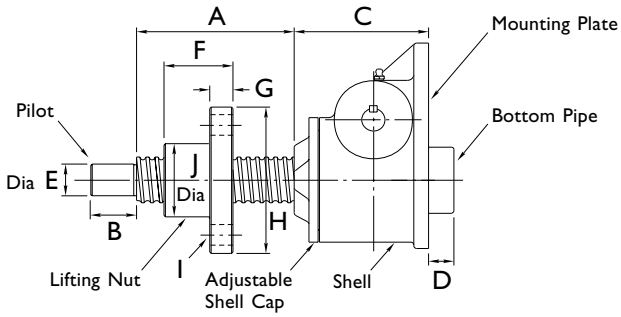

Model No	Rating (KN)	A	B	C	D	E	F	G	H	I	J
UE-28502	10	Raise + 74	16	90	0	12	44	12	55	6 Holes - 7 Dia. on 45 Dia. P.C.D.	32
UE-2803	25	Raise + 80	25	103.5	0	20	62	15	90	4 Holes - 13.5 Dia. on 65 Dia. P.C.D.	40
UE-28031		Raise + 100					82				
UE-2806	50	Raise + 105	30	138	0	25	87	20	120	4 Holes - 18 Dia. on 90 Dia. P.C.D.	60
UE-28061		Raise + 145					124				
UE-2811	100	Raise + 130	50	146.5	28	35	104	25	155	4 Holes - 22 Dia. on 115 Dia. P.C.D.	70
UE-28111		Raise + 160					134				
UE-2821	200	Raise + 150	65	195	24	45	125	35	185	4 Holes - 26 Dia. on 135 Dia. P.C.D.	85
UE-28211		Raise + 190					163				
UE-2831	300	Raise + 240	85	235	40	75	200	48	230	4 Holes - 26 Dia. on 175 Dia. P.C.D.	120
UE-2861	500	Available on Request									

1.3.1.2.3.2. Inverted Rotating Ball Screw Actuator

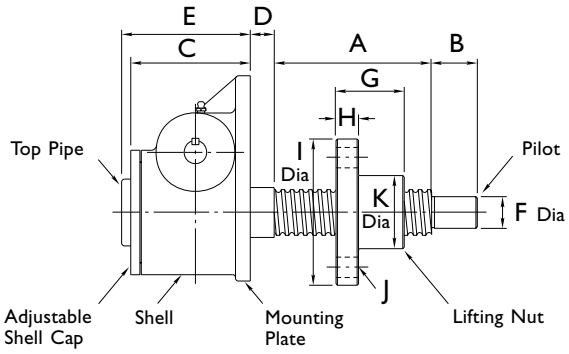

Model No	Rating (KN)	A	B	C	D	E	F	G	H	I	J	K
DE-28502	10	Raise + 74	16	90	10	90	12	44	12	55	6 Holes - 7 Dia. on 45 Dia. P.C.D.	32
DE-2803	25	Raise + 80	25	95.5	13.5	95.5	20	62	15	90	4 Holes - 13.5 Dia. on 65 Dia. P.C.D.	40
DE-28031		Raise + 100						82				
DE-2806	50	Raise + 105	30	122	18	122	25	87	20	120	4 Holes - 18 Dia. on 90 Dia. P.C.D.	60
DE-28061		Raise + 145						124				
DE-2811	100	Raise + 130	50	130.5	26.5	130.5	35	104	25	155	4 Holes - 22 Dia. on 115 Dia. P.C.D.	70
DE-28111		Raise + 160						134				
DE-2821	200	Raise + 150	65	179	25	203	45	125	35	185	4 Holes - 26 Dia. on 135 Dia. P.C.D.	85
DE-28211		Raise + 190						163				
DE-2831	300	Raise + 240	85	235	25	275	75	200	48	230	4 Holes - 26 Dia. on 175 Dia. P.C.D.	120
DE-2861	500	Available on Request										

1.3.1.3. Bellows Boots for Metric Actuators

Features

- Protects the screw from dust and dirt.
- Guards against moisture and corrosive contaminants.
- Helps maintain the proper lubrication.
- Boots are made of P.V.C. coated nylon with sewn construction. Other materials are available for applications involving high temperatures, highly corrosive atmospheres and other special conditions.

1.3.1.3.1. Boot Dimensions

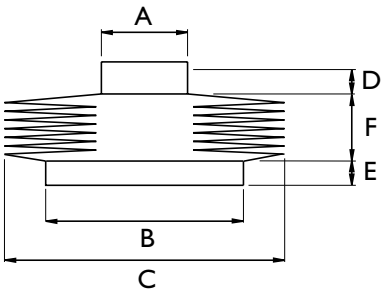

Model	A	B	C	D	E
E28501-B	30	75	114	12	12
E2802-B	40	66	120	15	15
E2805-B	50	85	140	15	15
E2810-B	65	100	150	15	15
E2820-B	75	105	165	20	20
E2830-B	Available on Request				
E2860-B	Available on Request				

Model		E28501-B	E2802-B	E2805-B	E2810-B	E2820-B	E2830-B	E2860-B
F	Raise 0 →300	16	20	20	20	20	Available on Request	Available on Request
	Raise 300 → 600	32	30	30	30	30		
	Raise 600 →900	-	-	45	-	-		
	Raise 600 → 1050	56	50	-	50	50		
	Raise 900 → 1050	-	-	50	-	-		
	Raise 1050 → 1500	80	70	70	70	70		
	Raise 1500 → 1800	-	100†	95	-	90 †		
	Raise 1500 →2000	-	-	-	105	-		
	Raise 1800 →2100	-	-	110†	-	110†		
	Raise 2000 →2500	-	-	-	120 †	-		
	Raise 2100 →2500	-	-	130†	-	-		
	Raise 2500 →3000	-	-	160†	-	-		

Note *1. F = Bellows boot minimum closed thickness.*
2. - = Not applicable consult Power Jacks Ltd.
3. † = Control tapes fitted (approximately 20 mm increase to outer diameter).

1.3.1.3.2. Upright Metric Ball Screw Actuators with Bellows Boots

Closed Heights

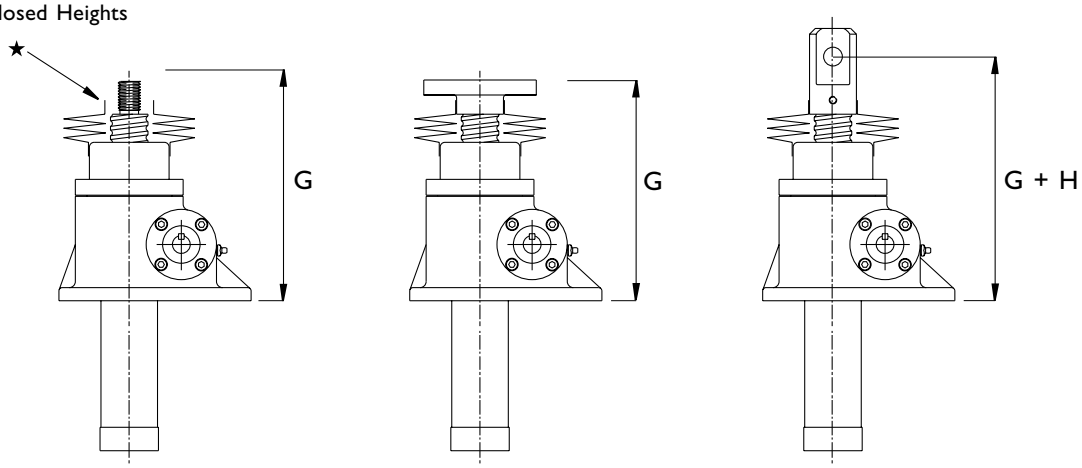

Threaded End *Top Plate* *Clevis End*

1.3.1.3.2.1. Standard Dimensions for all Upright Metric Ball Screw Actuators

Model		E28501-B	E2802-B	E28021-B	E2805-B	E28051-B	E2810-B	E28101-B	E2820-B	E28201-B	E2830-B & E2860-B
G	Raise 0 → 150	-	-	-	-	-	-	-	-	-	Available on Request
	Raise 0 → 300	166	180	200	230	270	255	285	323	361	
	Raise 300 → 600	182	190	210	240	280	265	295	333	371	
	Raise 600 → 900	-	-	-	255	295	-	-	-	-	
	Raise 600 → 1050	206	210	230	-	-	285	315	353	391	
	Raise 900 → 1050	-	-	-	260	300	-	-	-	-	
	Raise 1050 → 1500	230	230	250	280	320	305	335	373	411	
	Raise 1500 → 1800	-	260 †	280 †	305	345	-	-	393 †	431 †	
	Raise 1500 → 2000	-	-	-	-	-	340	370	-	-	
	Raise 1800 → 2100	-	-	-	320 †	360 †	-	-	413 †	451 †	
	Raise 2000 → 2500	-	-	-	-	-	355 †	385 †	-	-	
	Raise 2100 → 2500	-	-	-	340 †	380 †	-	-	-	-	
	Raise 2500 → 3000	-	-	-	370 †	410 †	-	-	-	-	
H	Extra Closed Height for Clevis	20	25	25	25	25	45	45	45	45	

Note
1. *Supplied complete with a set of corrosion-resistant 'jubilee' clips (2) suitable for fitting over collar diameters*
2. *† Control tapes are fitted (approximately 20 mm increase to outer diameter).*
3. *For horizontal installation exceeding 450 mm of travel, internal boot guides are recommended.*
4. *Customers with threaded end actuators must provide a fixing for the unattached collar (★).*
5. *Bellows boots for Rotating Screw Actuators consult Power Jacks Ltd.*
6. *For other sizes, raises, and materials please consult Power Jacks Ltd.*
7. *All dimensions in millimetres unless otherwise stated.*

1.3.1.3.3. Inverted Metric Ball Screw Actuators with Bellows Boots

Closed Heights

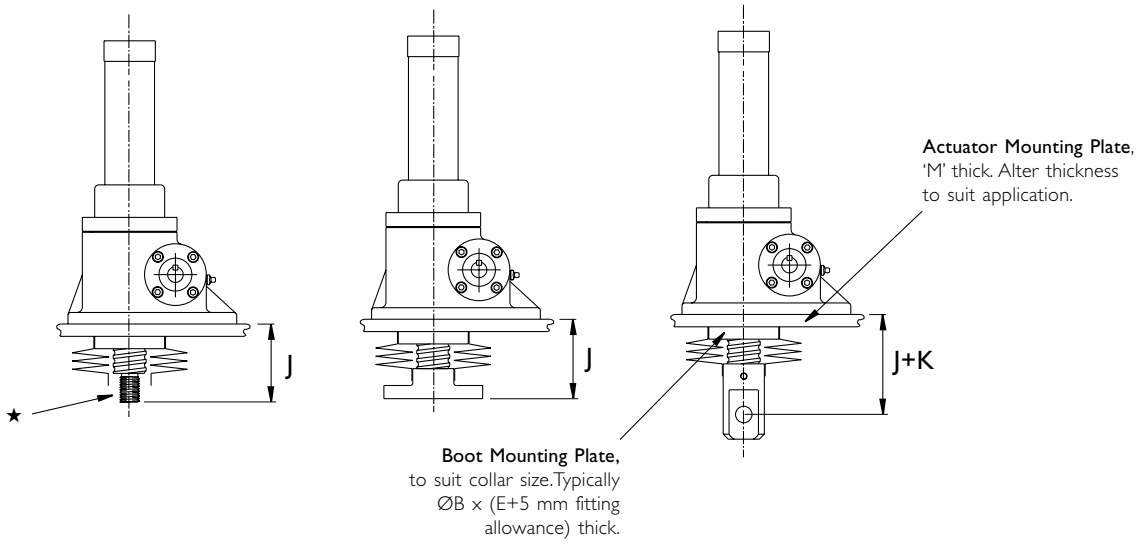

1.3.1.3.3.1. Standard Dimensions for all Inverted Metric Ball Screw Actuators

Model		E28501-B	E2801-B & E28011-B	E2804-B & E28041-B	E2809-B & E28091-B	E2819-B & E28191-B	E2829-B & E2859-B
M	Mounting Plate Thickness	10	15	15	20	20	30
J	Raise 0 → 150	-	-	-	-	-	Available on Request
	Raise 0 → 300	61	100	105	120	140	
	Raise 300 → 600	77	110	115	130	150	
	Raise 600 → 900	-	-	130	-	-	
	Raise 600 → 1050	101	130	-	150	170	
	Raise 900 → 1050	-	-	135	-	-	
	Raise 1050 → 1500	125	150	155	170	190	
	Raise 1500 → 1800	-	180†	170	-	210†	
	Raise 1500 → 2000	-	-	-	195	-	
	Raise 1800 → 2100	-	-	185†	-	230†	
	Raise 2000 → 2500	-	-	-	210†	-	
	Raise 2100 → 2500	-	-	205†	-	-	
	Raise 2500 → 3000	-	-	235†	-	-	
K	Extra Closed Height For Clevis	20	25	25	45	45	

1.3.1.3.4. Notes for all Metric Ball Screw Actuators with Bellows Boots

Note

1. *Supplied complete with a set of corrosion-resistant 'jubilee' clips (2) suitable for fitting over collar diameters.*
2. *† Control tapes are fitted (approximately 20 mm increase to outer diameter).*
3. *For horizontal installation exceeding 450 mm of travel, internal boot guides are recommended.*
4. *Customers with threaded end actuators must provide a fixing for the unattached collar (★).*
5. *Bellows boots for Rotating Screw Actuators consult Power Jacks Ltd.*
6. *For other sizes, and materials please contact Power Jacks Ltd.*
7. *All dimensions in millimetres unless otherwise stated.*
8. *Dimensions subject to change without notice.*

1.3.1.4. Standard Flange Bolt Configuration for Worm Shafts

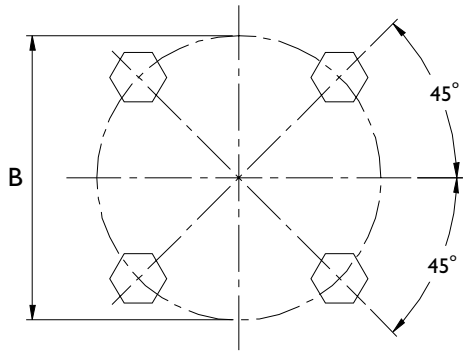

Model	'B' Bolt P.C.D. (mm)	Bolt Information
E28501	-	-
E2802	46	M6 x 1 mm Pitch, 14 mm Deep
E2805	61	M8 x 1.25 mm Pitch, 22 mm Deep
E2810	70	M8 x 1.25 mm Pitch, 14 mm Deep
E2820	88	M10 x 1.5 mm Pitch, 14 mm Deep
E2830	107	M10 x 1.5 mm Pitch, 19 mm Deep

Note 1. *All dimensions in millimetres unless otherwise stated.*
2. *Dimensions subject to change without notice.*

1.3.1.5. Metric Double Clevis End Ball Screw Actuators

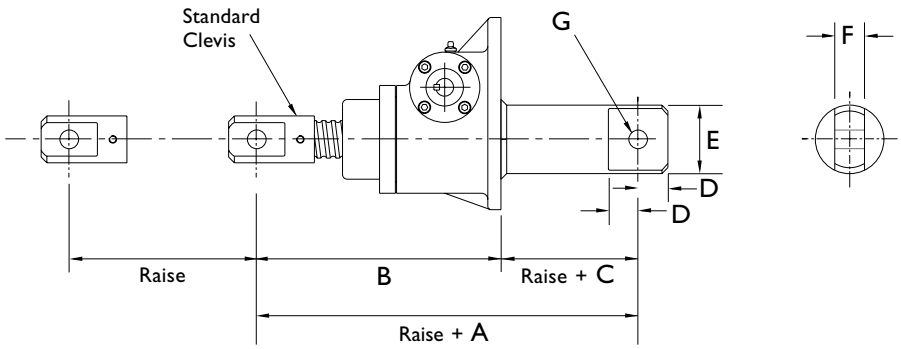

Model	CCE 28501	CCE 2802	CCE 28021	CCE 2805	CCE 28051	CCE 2810	CCE 28101	CCE 2820	CCE 28201	CCE 2830	CCE 2860
Capacity (kN)	10	25	25	50	50	100	100	200	200	300	500
A	Available on Request	250	270	310	350	420	450	500	538	Available on Request	Available on Request
B		192	212	242	282	292	322	361	399		
C		58	58	68	68	128	128	139	139		
D		23	23	30	30	33	33	40	40		
E		48.3	48.3	60.3	60.3	73	73	102	102		
F		30	30	35	35	40	40	50	50		
G		16	16	20	20	22	22	30	30		
Max Raise at Max Rated Load in Compression		280	200	600	560	658	588	769	621		

Note 1. *For other performance and dimension information refer to translating screw models.*
2. *All dimensions in millimetres unless otherwise stated.*
3. *Dimensions subject to change without notice.*

1.3.1.6. Motor Adaptors for Metric Ball Screw Actuators

Dimensions and details are the same as for Metric Machine Screw Actuators.

Please refer to section 1.2.2.11.

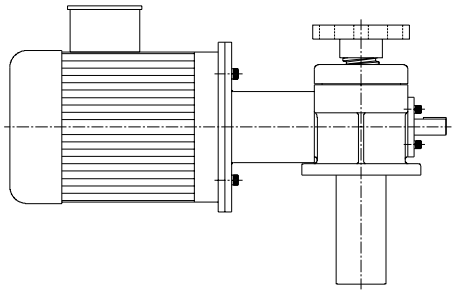

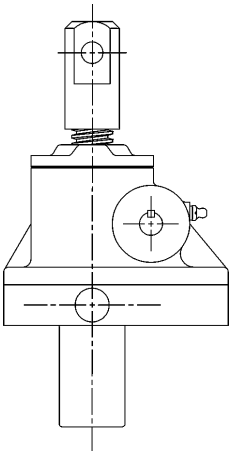

1.3.1.7. Trunnion Mounts for Metric Ball Screw Actuators

Dimensions and details are the same as for Metric Machine Screw Actuators.

Please refer to section 1.2.2.12.

1.3.1.8. Rotary Limit Switch Adaptors for Metric Ball Screw Actuators

Dimensions and details are the same as for Metric Machine Screw Actuators.

Please refer to sections 1.2.2.13. and 1.2.2.14.

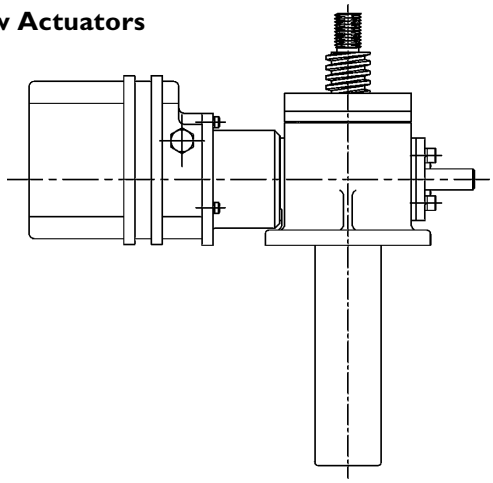

1.3.1.9. Limit Switches Mounted on Metric Ball Screw Actuator Bottom Pipes

Dimensions and details are the same as for Metric Machine Screw Actuators.

Please refer to section 1.2.2.16.

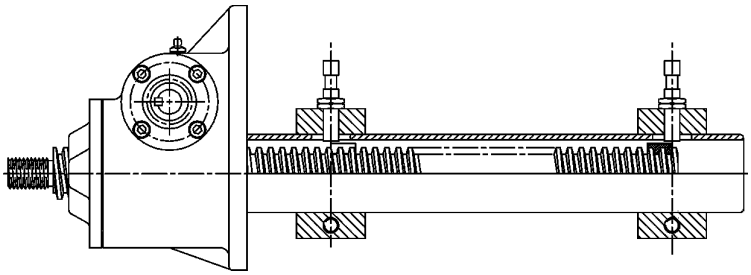

1.3.1.10. Anti-Rotation for Metric Ball Screw Actuators

The anti-rotation device is available for translating ball screw models only. It is used only when the load to be moved (actuated) may rotate, i.e. the screw is unguided and does not prevent rotation.

The anti-rotation device consists of a square steel tube which guides the movement of a square aluminium bronze guide block fitted to the end of the ball screw. The guide block also acts as a stop nut.

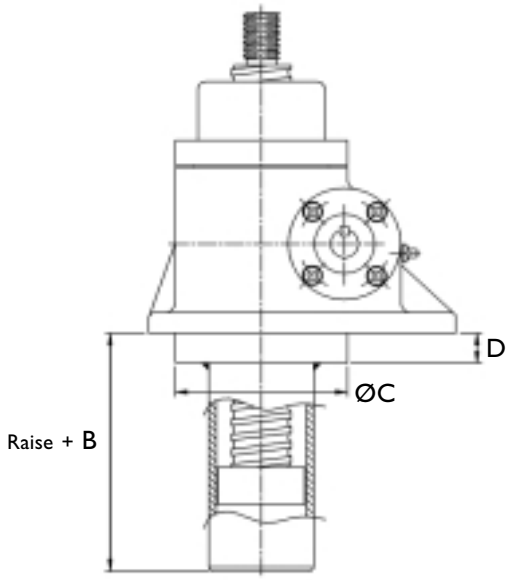

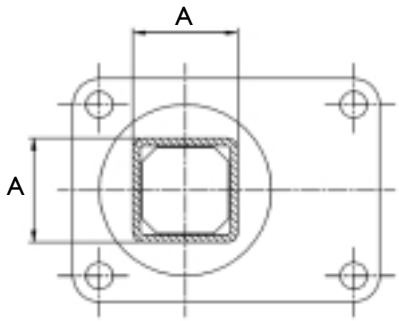

Model	28501	2802	2805	2810	2820	2830	2860
Capacity (kN)	10	25	50	100	200	300	500
A	AOR	50	70	AOR	AOR	AOR	AOR
B	AOR	50	60	AOR	AOR	AOR	AOR
C	AOR	90	115	AOR	AOR	AOR	AOR
D	AOR	16	20	AOR	AOR	AOR	AOR

Note
1. *AOR = Application On Request, consult Power Jacks Ltd.*
2. *All dimensions in millimetres unless otherwise stated.*
3. *Dimensions subject to change without notice.*

1.3.2. M-Series Imperial Ball Screw Jacks

Advantages

- Move Loads and apply force more efficiently than machine screw actuators.
- Permit faster operation and longer life under load.
- Require less power by providing positive mechanical action.
- Permit synchronisation of multiple units.
- Capacity from 1/2 to 50 tons (4.5 kN to 450 kN).
- Handles full load in tension or compression.
- 40 models available.

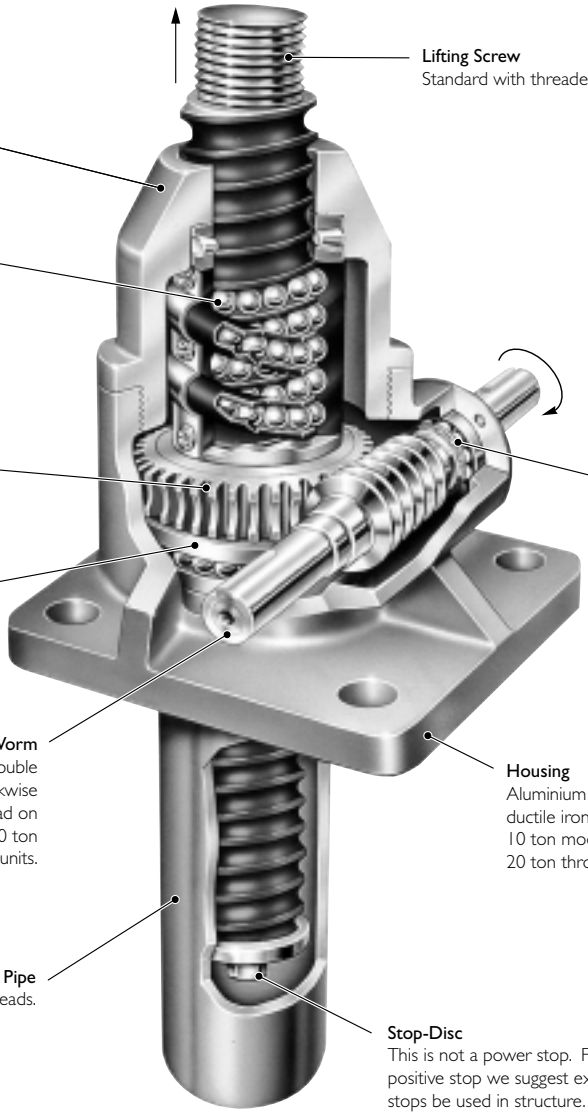

The Imperial ball screw gives you a single-package, positive action linear actuator which can be driven by an electric, air or hydraulic motor. A ball-bearing type heat-treated screw and mating nut with rolling contact reduces friction to a bare minimum in converting torque to thrust. Overall operating efficiency is as high as 70% in some models, depending on the worm gear ratio.

Imperial ball screw actuators are available as translating or rotating screws in either upright or inverted configurations. In the translating screw type, the ball nut is fixed to the gear and the lifting screw moves up and down through the nut. In the rotating screw type, the screw is fixed to the gear and the ball nut travels along the screw.

Depending on size and type of load, models are available with raises up to 10 feet (3 metres). Raises up to 20 feet (6 metres) are available on request. Ball screw actuators may be used individually, in tandem or in multiple arrangements. Special models are available and there is no extra charge for single ended worm shafts extensions.

Imperial Ball Screw Actuator Models

Features

- **High Speed** - Low friction permits linear motion in some models up to 300 inches/min (7.62 m/min) at 1800 rpm worm shaft speeds, providing maximum horsepower ratings are not exceeded.
- **Precise Positioning** - Can be controlled accurately for positioning within thousandths of an inch.
- **Positive Action** - Operates with a high degree of reliability, without the need for costly pumps, hoses or valves
- **Long-Life** - Low friction means longer operating life.
- **Low Power Usage** - Highly efficient design means less power is needed to achieve a given thrust; power needs are much as two-thirds that of machine screw actuators.

Options

- **3 Standard Gear Ratios** - Wide selection of gear ratios, increases the amount of raise rates available.
- **2 Ball Screw Lead Options** - On the 2, 5 and 10 ton models there is the option of either the standard or a 1" (25.4 mm) lead for rapid raise rates.
- **Screw on Ends** - The standard actuator has a threaded end to which clevis or top plates can be screwed. Note these items are shipped loose and must be spot drilled before seating set screws in field installations.
- **Bellows Boot Option** - Protects the screw from dust, dirt, moisture and corrosive contaminants.
- **Double Clevis End Option** - Incorporates a special clevis end bottompipe and standard clevis end on the lifting screw.

Note *A brake is required on 2800 and 9800 actuator units due to their high efficiency.*

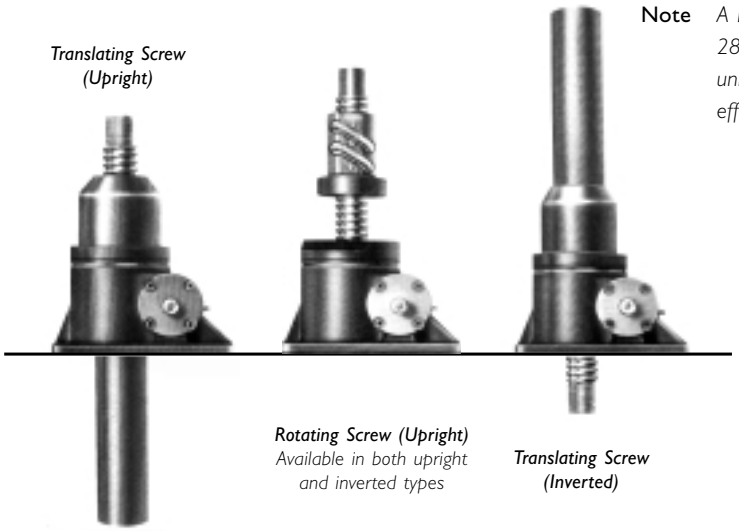

Note ***Translating screw models covered by U.S. Patent No. 3,178,958***

Clockwise rotation of worm raises load on all models (refer previous page) except 50 ton ball screw actuator - counter clockwise available at extra charge.

The lifting screw end should be bolted to the lifting member to prevent the screw from rotating.

Actuators are equipped with "Alemite" grease fittings.

Recommended lubricants are listed in the installation and maintenance instructions.

Actuators supplied complete with drive shaft keys.

Attachments

IEC and Nema C-Face flanges, motors, gear boxes, reducers and couplings available for single actuator drive or multiple actuator arrangements (refer 4, 5,6,7 and 8.).

Motion control components include motor drives, Motion Controllers with operator interfaces, encoders, limit switches, potentiometers and meters with LCD display (refer 8.).

1.3.2.1. Performance of Standard Imperial Ball Screw Actuators

Model	Upright / Inverted	28631 / 28630	2802 & 9802* / 2801 & 9801*	28021 & 98021* / 28011 & 98011*	28003 / 28002	2805 / 2804	28051 / 28041	2810 / 2809	28101 / 28091	2820 / 2819	2825 / 2824	2860 / 2859
Capacity (Short Tons)		0.5	2	2	3	5	5	10	10	20	25	50
Lifting Screw (Inches)	Diameter	5/8	1	1	1 11/64	1.5	1.5	1.5	1.5	2.25	3	4
	Lead	0.2	0.25	1	0.413	0.474	1	0.474	1	0.5	0.66	1
Worm Gear Ratios	Standard	5:1	6:1	6:1	6:1	6:1	6:1	8:1	8:1	8:1	10 2/3:1	10 2/3:1
	Option 1	20:1	24:1	24:1	24:1	24:1	24:1	24:1	24:1	24:1	32:1	32:1
	Option 2	-	12:1	12:1	12:1	-	-	-	-	-	-	-
Turns of Worm for 1" Raise	Standard	25	24	6	14.526	12.667	6	16.888	8	16	16.16	10.66
	Option 1	100	96	24	58.104	50.667	24	50.667	24	48	48.48	32
	Option 2	-	48	12	29.052	-	-	-	-	-	-	-
Maximum HP per actuator	Standard	1/3	2	2	2	4	4	5	5	5	8	15
	Option 1	1/6	1/2	1/2	1/2	3/4	3/4	1 1/2	1 1/2	1 1/2	2 1/2	6
	Option2	-	3/4	3/4	3/4	-	-	-	-	-	-	-
Starting Torque at Full Load (in.lb)	Standard	10.5	50	180	110	220	500	350	800	700	925	2700
	Option 1	5	25	80	50	90	206	175	400	325	475	1500
	Option 2	-	30	135	68	-	-	-	-	-	-	-
Running Torque at Full Load (in.lb)	Standard	9.5	45	160	100	180	410	300	700	650	825	2200
	Option 1	4.5	20	70	45	80	183	150	290	300	425	1200
	Option 2	-	25	105	60	-	-	-	-	-	-	-
Efficiency Rating	Standard	0.67	0.59	0.66	0.66	0.70	0.65	0.63	0.57	0.61	0.60	0.68
	Option 1	0.35	0.33	0.38	0.37	0.39	0.36	0.42	0.46	0.44	0.39	0.41
	Option 2	-	0.53	0.51	0.55	-	-	-	-	-	-	-
Weight with Baise Raise of 6" (lbs)		2.75	20	20	21	40	40	50	50	115	235	520
Weight for each additional 1" Raise (lbs)		0.1	0.33	0.33	0.42	0.85	0.85	0.85	0.85	1.5	2.9	5
Hold Back Torque at Rated Load (ft.lb)	Standard	1	2	2	7	8	8	11	11	24	24	92
	Option 1	0.5	0.5	0.5	0.5	0.5	0.5	0.5	0.5	2	2	33
	Option 2	-	1	1	2	-	-	-	-	-	-	-

** Dimension same as model 2802 and 28021.*

Note *Lifting screws listed above are not keyed. Must be held to prevent rotation. Hold Back Torque is restraining torque at the worm shaft to keep load from running down. Lifting torques are proportional to load, down to 25% of rated load.*

1.3.2.2. Life Expectancy of Imperial Ball Screw and Ball Nut

Predicting screw and nut life lets you forecast necessary replacement, saving time and money. It also permits selection of the most economical screw size.

Use caution when installing the ball screw. The life expectancy listed below may be greatly reduced if ball screws are subjected to misalignment, shock loads, side thrust, environmental contamination or lack of lubrication maintenance.

It is possible to estimate the minimum life of the Duff-Norton ball screw and nut only. Because of the many variable operating conditions, we can not accurately predict the life of the worm and gear set in the 2800 and 9800 Series actuators.
Consult Power Jacks Ltd for advice.

Life in Thousands of Inches Travelled

Model	28631	2802& 9802	28021& 98021	28003	2805	28051	2810	28101	2820	2825	2860
Capacity (Short Tons)	0.5	2	2	3	5	5	10	10	20	25	50
100% Full Load	400	50	125	250	1000	500	100	50	150	700	600
75% Full Load	1200	150	300	650	2500	1000	350	150	350	2000	1500
50% Full Load or Less	3500	500	1000	2200	9000	4000	1000	500	1200	6000	5000

Note *5 Ton and 10 Ton models use the same screw and nut.*

1.3.2.3. Imperial Ball Nut Return Tube Dimensions

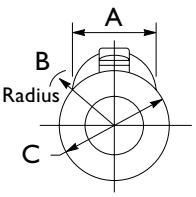

Model	28631	2802 & 9802	28021& 98021	28003	2805 & 2810	28051 & 28101	2820	2825	2860
Lead	0.200	0.250	1.000	0.413	0.474	1.00	0.500	0.660	1.000
A	0.822	1.104	1.104	1.587	1.981	1.718	2.561	3.349	4.029
B (Radius)	0.797	1.194	1.194	1.386	1.69	1.72	2.272	3.076	3.756
C	1 Sq.	1.5 Sq.	1.5 Sq.	2.125 Dia.	2.625 Dia.	2.625 Dia.	3.75 Dia.	4.751 Dia.	5.88 Dia.

Note: *All dimensions in inches.*

1.3.2.1. Performance of Standard M-Series Imperial Ball Screw Jacks

Model	Upright / Inverted	28631 / 28630	2802 & 9802* / 2801 & 9801*	28021 & 98021* / 28011 & 98011*	28003 / 28002	2805 / 2804	28051 / 28041	2810 / 2809	28101 / 28091	2820 / 2819	2825 / 2824	2860 / 2859
Capacity (Short Tons)		0.5	2	2	3	5	5	10	10	20	25	50
Lifting Screw (Inches)	Diameter	5/8	1	1	1 11/64	1.5	1.5	1.5	1.5	2.25	3	4
	Lead	0.2	0.25	1	0.413	0.474	1	0.474	1	0.5	0.66	1
Worm Gear Ratios	Standard	5:1	6:1	6:1	6:1	6:1	6:1	8:1	8:1	8:1	10 2/3:1	10 2/3:1
	Option 1	20:1	24:1	24:1	24:1	24:1	24:1	24:1	24:1	24:1	32:1	32:1
	Option 2	-	12:1	12:1	12:1	-	-	-	-	-	-	-
Turns of Worm for 1" Raise	Standard	25	24	6	14.526	12.667	6	16.888	8	16	16.16	10.66
	Option 1	100	96	24	58.104	50.667	24	50.667	24	48	48.48	32
	Option 2	-	48	12	29.052	-	-	-	-	-	-	-
Maximum HP per actuator	Standard	1/3	2	2	2	4	4	5	5	5	8	15
	Option 1	1/6	1/2	1/2	1/2	3/4	3/4	1 1/2	1 1/2	1 1/2	2 1/2	6
	Option2	-	3/4	3/4	3/4	-	-	-	-	-	-	-
Starting Torque at Full Load (in.lb)	Standard	10.5	50	180	110	220	500	350	800	700	925	2700
	Option 1	5	25	80	50	90	206	175	400	325	475	1500
	Option 2	-	30	135	68	-	-	-	-	-	-	-
Running Torque at Full Load (in.lb)	Standard	9.5	45	160	100	180	410	300	700	650	825	2200
	Option 1	4.5	20	70	45	80	183	150	290	300	425	1200
	Option 2	-	25	105	60	-	-	-	-	-	-	-
Efficiency Rating	Standard	0.67	0.59	0.66	0.66	0.70	0.65	0.63	0.57	0.61	0.60	0.68
	Option 1	0.35	0.33	0.38	0.37	0.39	0.36	0.42	0.46	0.44	0.39	0.41
	Option 2	-	0.53	0.51	0.55	-	-	-	-	-	-	-
Weight with Baise Raise of 6" (lbs)		2.75	20	20	21	40	40	50	50	115	235	520
Weight for each additional 1" Raise (lbs)		0.1	0.33	0.33	0.42	0.85	0.85	0.85	0.85	1.5	2.9	5
Hold Back Torque at Rated Load (ft.lb)	Standard	1	2	2	7	8	8	11	11	24	24	92
	Option 1	0.5	0.5	0.5	0.5	0.5	0.5	0.5	0.5	2	2	33
	Option 2	-	1	1	2	-	-	-	-	-	-	-

** Dimension same as model 2802 and 28021.*

Note *Lifting screws listed above are not keyed. Must be held to prevent rotation. Hold Back Torque is restraining torque at the worm shaft to keep load from running down. Lifting torques are proportional to load, down to 25% of rated load.*

1.3.2.2. Life Expectancy of Imperial Ball Screw and Ball Nut

Predicting screw and nut life lets you forecast necessary replacement, saving time and money. It also permits selection of the most economical screw size.

Use caution when installing the ball screw. The life expectancy listed below may be greatly reduced if ball screws are subjected to misalignment, shock loads, side thrust, environmental contamination or lack of lubrication maintenance.

It is possible to estimate the minimum life of the Duff-Norton ball screw and nut only. Because of the many variable operating conditions, we can not accurately predict the life of the worm and gear set in the 2800 and 9800 Series actuators.
Consult Power Jacks Ltd for advice.

Life in Thousands of Inches Travelled

Model	28631	2802& 9802	28021& 98021	28003	2805	28051	2810	28101	2820	2825	2860
Capacity (Short Tons)	0.5	2	2	3	5	5	10	10	20	25	50
100% Full Load	400	50	125	250	1000	500	100	50	150	700	600
75% Full Load	1200	150	300	650	2500	1000	350	150	350	2000	1500
50% Full Load or Less	3500	500	1000	2200	9000	4000	1000	500	1200	6000	5000

Note *5 Ton and 10 Ton models use the same screw and nut.*

1.3.2.3. Imperial Ball Nut Return Tube Dimensions

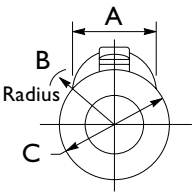

Model	28631	2802 & 9802	28021& 98021	28003	2805 & 2810	28051 & 28101	2820	2825	2860
Lead	0.200	0.250	1.000	0.413	0.474	1.00	0.500	0.660	1.000
A	0.822	1.104	1.104	1.587	1.981	1.718	2.561	3.349	4.029
B (Radius)	0.797	1.194	1.194	1.386	1.69	1.72	2.272	3.076	3.756
C	1 Sq.	1.5 Sq.	1.5 Sq.	2.125 Dia.	2.625 Dia.	2.625 Dia.	3.75 Dia.	4.751 Dia.	5.88 Dia.

Note: *All dimensions in inches.*

1.3.2.4. Standard Imperial Translating Ball Screw Actuators

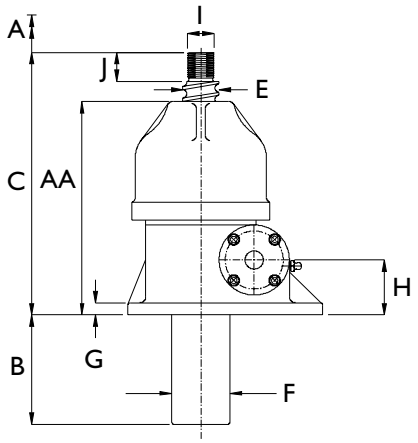

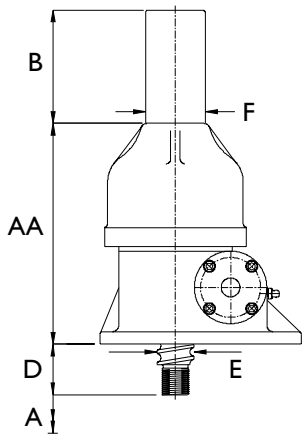

Plan View

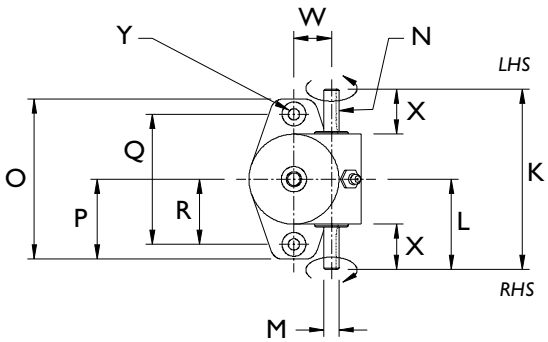

Model:
28631

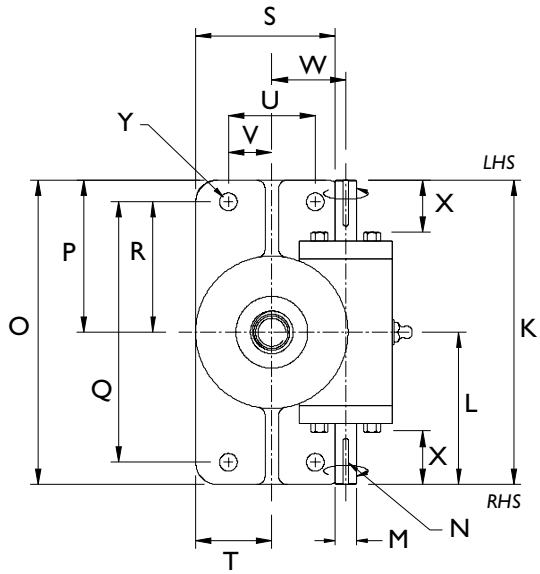

Models:
2802, 28021, 28003, 2860.

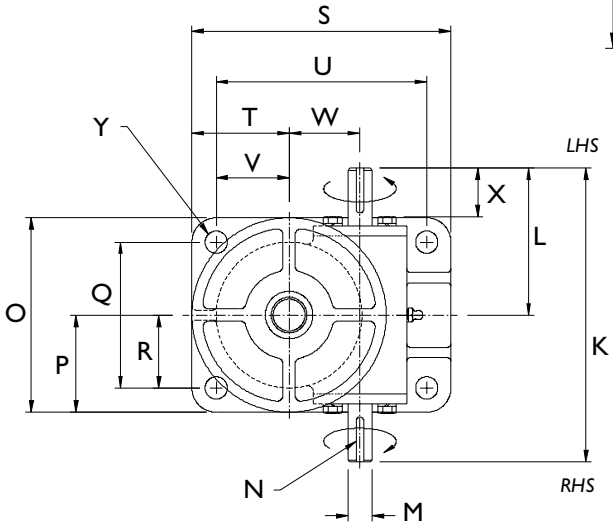

Models:
9802, 98021, 2805, 28051, 2810, 28101, 2820, 2825.

Note *LHS* = *Left Hand Side*
RHS = *Right Hand Side*

Model Upright	28631	2802 & 28021	9802 & 98021	28003	2805 & 28051	2810 & 28101	2820	2825	2860
Inverted	28630	2801 & 28011	9801 & 98011	28002	2804 & 28041	2809 & 28091	2819	2824	2859
Capacity (Short Tons)	0.5	2	2	3	5	10	20	25	50
A	Raise As Required								
B	A + 1	A + 0.75	A + 0.75	A + 0.75	A + 2	A + 1	A + 0.75	A + 2	A + 2.75
C	5	7.5	7.5	9.25	10.75	10 3/8	16.5	19.75	25 3/8
D	1	1 3/8	1 3/8	1 3/8	1 3/8	1.5	2.75	3 1/8	3 5/8
E	5/8	1	1	1 11/64	1.5	1.5	2.25	3	4
F	1 1/16	1 21/32	1 21/32	1 21/32	2 3/8	2 7/8	3.5	4.5	5 9/16
G	5/16	0. 5	0. 5	0. 5	0. 5	0.5	0.75	1	1.25
H	1 ± 0.003	1.75 ± 0.005	1.75 ± 0.005	1.75 ± 0.005	2.25 ± 0.005	2.25 ± 0.005	3.25 ± 0.005	4 ± 0.005	4.75 ± 0.005
I	3/8-24UNF-2A	3/4-16UNF-2A	3/4-16UNF-2A	3/4-16UNF-2A	1-14UNS-2A	1-14UNS-2A	1.75-12UN-2A	2.25-12UN-2A	3.25-12UN-2A
J	0.75	1 1/8	1 1/8	1 1/8	1 1/8	1 1/8	2.25	2.25	2.75
K	4.5	7	7	7	9	11	11	14	22
L	2.25	3.5	3.5	3.5	4.5	5.5	5.5	7	11
M	0.375 / 0.373	0.500 / 0.498	0.500 / 0.498	0.625 / 0.623	0.749 / 0.747	0.999 /0.997	1.000 / 0.998	1.375 / 1.373	1.500 / 1.498
N	1/8 X 1/6 X 3/4	1/8 X 1/16 X 1	1/8 X 1/16 X 1	3/16 X 3/32 X 1	3/16X3/32X1.25	1/4 X 1.8 X 1.5	1/4 X 1/8 X 1.5	5/16 X 5/32 X 2	3/8 X 3/16 X 2.25
O	4	7	4 1/8	7	6	7.5	8.25	10.25	19.75
P	2	3.5	2 1/16	3.5	3	3.75	4 1/8	5 1/8	9 7/8
Q	3.25	6	3 1/8	6	4.5	5.75	6	7.5	16
R	1 5/8	3	1 9/16	3	2.25	2 7/8	3	3.75	8
S	-	3.5	6 1/4	3.5	8	8.75	11	13.75	9.75
T	-	1.75	2 7/16	1.75	3	2 7/8	4 1/8	5 1/8	4 7/8
U	-	2	5 1/4	2	6.5	7	8.75	11	6
V	-	1	1 15/16	1	2.25	2	3	3.75	3
W	0.941 / 0.938	1.705 / 1.702	1.705 / 1.702	1.706 / 1.701	2.190 / 2.188	2.601 / 2.598	2.601 / 2.598	3.755 / 3.750	5.316 / 5.313
X	1 1/8	1 1/8	1 1/8	1 1/8	1.5	1.8	1.5	2 5/16	4 7/16
Y	9/32	13/32	13/32	13/32	11/16	13 / 16	1 1/8	1 3/8	1 7/8
AA	4	5 5/8	5 5/8	7.25	8.75	8 3/8	13	16.75	21 3/8

1.3.2.5. Standard Imperial Translating Ball Screw Ends

Top Plate

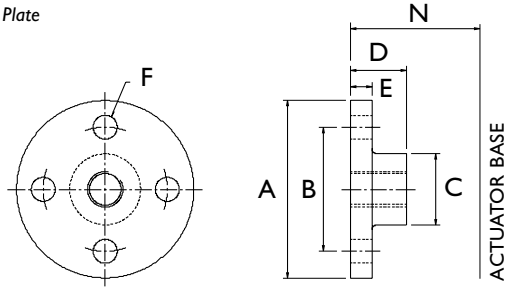

Clevis End

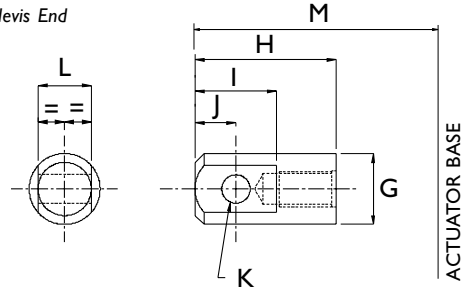

Model		28631	2802 & 28021	9802 & 98021	28003	2805 & 28051	2810 & 28101	2820	2825	2860
A		Ø 2.25	Ø 4.25	Ø 4.25	Ø 4.25	Ø 5	Ø 5.75	Ø 7	Ø 8.5	Ø 13
B		PCD 1.5	PCD 3	PCD 3	PCD 3	PCD 3.5	PCD 4.125	PCD 5	PCD 6	PCD 10
C		Ø 0.75	Ø 1.5	Ø 1.5	Ø 1.5	Ø 1.75	Ø 1.75	Ø 2.625	Ø 3.5	Ø 4.5
D		13/16	1 13/16	1 13/16	1 13/16	1.25	1.375	2 5/16	2 5/16	2 13/16
E		5/16	7/16	7/16	7/16	0.625	0.75	1	1	1.375
F		Ø 9/32	Ø 13/32	Ø 13/32	Ø 13/32	Ø 11/16	Ø 13/16	Ø 13/16	Ø 1 1/16	Ø 1.5
G		Ø 0.75	Ø1.5	Ø 1.5	Ø 1.5	Ø1.75	Ø 2	Ø 2.625	Ø 3.5	Ø 5
H		2.25	3	3	3	4.125	4.125	6.25	8.25	9.125
I		1	1.5	1.5	1.5	2.5	2.5	3	5	5.25
J		0.5	0.75	0.75	0.75	1.25	1.25	1.5	2.5	2.625
K		Ø 5/16	Ø 1/2	Ø 1/2	Ø 1/2	Ø 3/4	Ø 1	Ø 1 1/4	Ø 1 1/2	Ø 2
L		0.5	1	1	1	1.25	1.5	1.75	2.75	3.75
M	Upright	6	8 5/8	8 5/8	10 3/8	12 1/2	12 1/8	19	23 1/4	29 1/8
	Inverted	2	2 1/2	2 1/2	2 1/2	3 1/8	3 1/4	5 1/4	6 5/8	7 3/8
N	Upright	5	7 1/2	7 1/2	9 5/16	10 3/4	10 3/8	16 1/2	19 3/4	25 7/16
	Inverted	1 1/16	1 7/16	1 7/16	1 7/16	1 7/16	1 9/16	2 13/16	3 3/16	3 11/16

Model Upright	28631	2802 & 28021	9802 & 98021	28003	2805 & 28051	2810 & 28101	2820	2825	2860
Inverted	28630	2801 & 28011	9801 & 98011	28002	2804 & 28041	2809 & 28091	2819	2824	2859
Capacity (Short Tons)	0.5	2	2	3	5	10	20	25	50
A	Raise As Required								
B	A + 1	A + 0.75	A + 0.75	A + 0.75	A + 1	A + 1	A + 0.75	A + 2	A + 2.75
C	5	7.5	7.5	9.25	10.75	10 3/8	16.5	19.75	25 3/8
D	1	1 3/8	1 3/8	1 3/8	1 3/8	1.5	2.75	3 1/8	3 5/8
E	5/8	1	1	1 11/64	1.5	1.5	2.25	3	4
F	1 1/16	1 21/32	1 21/32	1 21/32	2 3/8	2 7/8	3.5	4.5	5 9/16
G	5/16	0. 5	0. 5	0. 5	0. 5	0.5	0.75	1	1.25
H	1 ± 0.003	1.75 ± 0.005	1.75 ± 0.005	1.75 ± 0.005	2.25 ± 0.005	2.25 ± 0.005	3.25 ± 0.005	4 ± 0.005	4.75 ± 0.005
I	3/8-24UNF-2A	3/4-16UNF-2A	3/4-16UNF-2A	3/4-16UNF-2A	1-14UNS-2A	1-14UNS-2A	1.75-12UN-2A	2.25-12UN-2A	3.25-12UN-2A
J	0.75	1 1/8	1 1/8	1 1/8	1 1/8	1 1/8	2.25	2.25	2.75
K	4.5	7	7	7	9	11	11	14	22
L	2.25	3.5	3.5	3.5	4.5	5.5	5.5	7	11
M	0.375 / 0.373	0.500 / 0.498	0.500 / 0.498	0.625 / 0.623	0.749 / 0.747	0.999 /0.997	1.000 / 0.998	1.375 / 1.373	1.500 / 1.498
N	1/8 X 1/6 X 3/4	1/8 X 1/16 X 1	1/8 X 1/16 X 1	3/16 X 3/32 X 1	3/16X3/32X1.25	1/4 X 1.8 X 1.5	1/4 X 1/8 X 1.5	5/16 X 5/32 X 2	3/8 X 3/16 X 2.25
O	4	7	4 1/8	7	6	7.5	8.25	10.25	19.75
P	2	3.5	2 1/16	3.5	3	3.75	4 1/8	5 1/8	9 7/8
Q	3.25	6	3 1/8	6	4.5	5.75	6	7.5	16
R	1 5/8	3	1 9/16	3	2.25	2 7/8	3	3.75	8
S	-	3.5	6 1/4	3.5	8	8.75	11	13.75	9.75
T	-	1.75	2 7/16	1.75	3	2 7/8	4 1/8	5 1/8	4 7/8
U	-	2	5 1/4	2	6.5	7	8.75	11	6
V	-	1	1 15/16	1	2.25	2	3	3.75	3
W	0.941 / 0.938	1.705 / 1.702	1.705 / 1.702	1.706 / 1.701	2.190 / 2.188	2.601 / 2.598	2.601 / 2.598	3.755 / 3.750	5.316 / 5.313
X	1 1/8	1 1/8	1 1/8	1 1/8	1.5	1.8	1.5	2 5/16	4 7/16
Y	9/32	13/32	13/32	13/32	11/16	13 / 16	1 1/8	1 3/8	1 7/8
AA	4	5 5/8	5 5/8	7.25	8.75	8 3/8	13	16.75	21 3/8

1.3.2.5. Standard Imperial Translating Ball Screw Ends

Top Plate

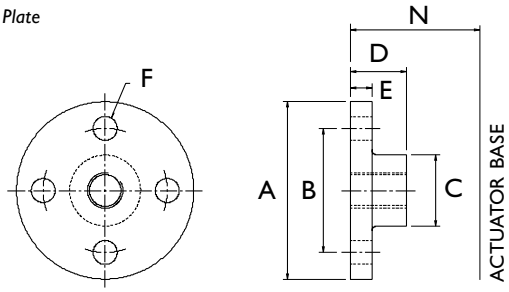

Clevis End

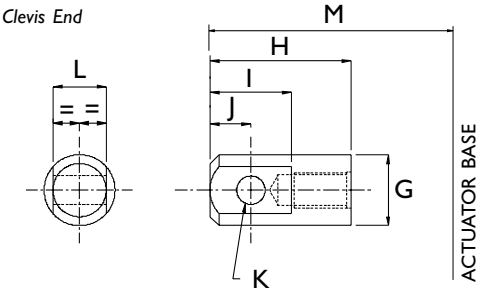

Model		28631	2802 & 28021	9802 & 98021	28003	2805 & 28051	2810 & 28101	2820	2825	2860
A		Ø 2.25	Ø 4.25	Ø 4.25	Ø 4.25	Ø 5	Ø 5.75	Ø 7	Ø 8.5	Ø 13
B		PCD 1.5	PCD 3	PCD 3	PCD 3	PCD 3.5	PCD 4.125	PCD 5	PCD 6	PCD 10
C		Ø 0.75	Ø 1.5	Ø 1.5	Ø 1.5	Ø 1.75	Ø 1.75	Ø 2.625	Ø 3.5	Ø 4.5
D		13/16	1 13/16	1 13/16	1 13/16	1.25	1.375	2 5/16	2 5/16	2 13/16
E		5/16	7/16	7/16	7/16	0.625	0.75	1	1	1.375
F		Ø 9/32	Ø 13/32	Ø 13/32	Ø 13/32	Ø 11/16	Ø 13/16	Ø 13/16	Ø 1 1/16	Ø 1.5
G		Ø 0.75	Ø1.5	Ø 1.5	Ø 1.5	Ø1.75	Ø 2	Ø 2.625	Ø 3.5	Ø 5
H		2.25	3	3	3	4.125	4.125	6.25	8.25	9.125
I		1	1.5	1.5	1.5	2.5	2.5	3	5	5.25
J		0.5	0.75	0.75	0.75	1.25	1.25	1.5	2.5	2.625
K		Ø 5/16	Ø 1/2	Ø 1/2	Ø 1/2	Ø 3/4	Ø 1	Ø 1 1/4	Ø 1 1/2	Ø 2
L		0.5	1	1	1	1.25	1.5	1.75	2.75	3.75
M	Upright	6	8 5/8	8 5/8	10 3/8	12 1/2	12 1/8	19	23 1/4	29 1/8
	Inverted	2	2 1/2	2 1/2	2 1/2	3 1/8	3 1/4	5 1/4	6 5/8	7 3/8
N	Upright	5	7 1/2	7 1/2	9 5/16	10 3/4	10 3/8	16 1/2	19 3/4	25 7/16
	Inverted	1 1/16	1 7/16	1 7/16	1 7/16	1 7/16	1 9/16	2 13/16	3 3/16	3 11/16

1.3.2.6. Standard Imperial Rotating Ball Screw Actuators

Note *For all other dimensions and performance data refer to translating screw models. All dimensions in inches (1" = 25.4 mm).*

1.3.2.6.1. Upright Rotating Ball Screw Actuator

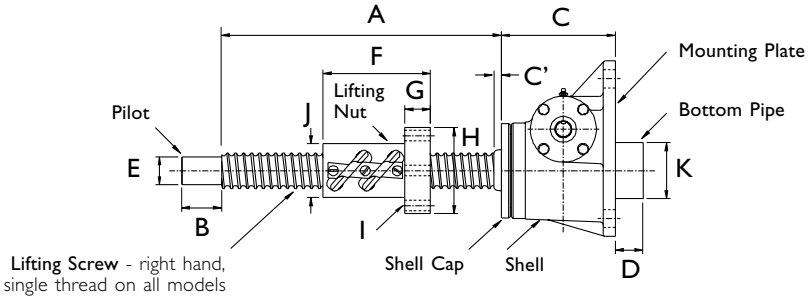

Model		UM 28632	KUM 2803	KUM 28031*	UM 9803	UM 98031*	KUM 28004	KUM 2806	KUM 28061*	UM 2811	UM 28111*	UM 2821	UM 2826	UM 2861*
Capacity (Short Tons)		0.25	2	2	2	2	3	5	5	10	10	20	25	50
A		Raise + 2	Raise + 3 1/16	Raise + 3 11/16	Raise + 3 1/16	Raise + 3 11/16	Raise + 3.75	Raise + 4 5/8	Raise + 4	Raise + 6	Raise + 5	Raise + 8	Raise + 10	Raise + 15
B		0.625	1.125	1.125	1.125	1.125	1.125	1	1	1	1	2.5	2.25	3.25
C		2 3/8	4 1/16	4 1/16	4 1/16	4 1/16	4 1/16	5 1/4	5 1/4	5 5/8	5 5/8	7 1/8	8 7/8	10 7/8
C'		0	0	0	0	0	7/16	0	0	0	0	1	1 5/8	1 1/8
D		0	0	0	0	0	0	0	0	0	0	0	0	0.75
E	Dia.	0.437	0.750	0.750	0.750	0.750	0.750	1.000	1.000	1.000	1.000	1.750	2.250	3.250
		0.435	0.748	0.748	0.748	0.748	0.748	0.998	0.998	0.998	0.998	1.748	2.248	3.248
F		1.75	2 3/8	3 1/32	2 3/8	3 1/32	3.395	4.33	3.65	4.33	3.65	6.706	9.395	12.625
G		0.53125	0.630	0.630	0.630	0.630	0.832	0.895	1.02	0.895	1.02	1.582	2.02	2.02
H	Dia.	2.625	3.25	3.25	3.25	3.25	4.2	4 15/16	4 15/16	4 15/16	4 15/16	5.375	7.375	9.75
	Holes	4	4	4	4	4	4	4	4	4	4	6	8	6
I	Dia.	17/64	17/64	17/64	17/64	17/64	25/64	17/32	17/32	17/32	17/32	21/32	25/32	1 1/32
	P.C.D	2 3/32	2.75	2.75	2.75	2.75	3 7/16	4 1/16	4 1/8	4 1/16	4 1/8	4.375	6.25	8
J	Dia.	1 SQR.	1.5 SQR.	1.5 SQR.	1.5 SQR.	1.5 SQR.	2.125	2.625	2.25 SQR.	2.625	2.25 SQR.	3.375	4.751	5.88
K	Dia.	0	0	0	0	0	0	0	0	0	0	0	0	5.5625

** 1" Lead Screw Models.*

1.3.2.6.2. Inverted Rotating Ball Screw Actuator

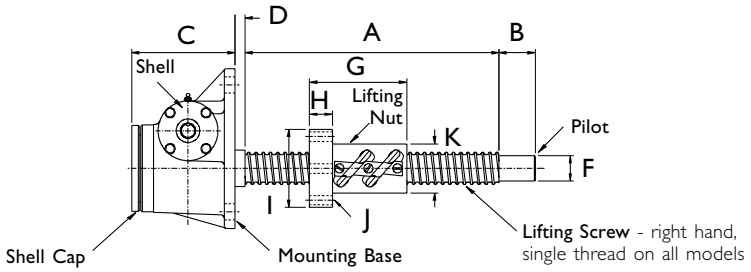

Model		DM 28632	KDM 2803	KDM 28031*	KDM 9803	KDM 98031*	KDM 28004	KDM 28006	KDM 28061*	KDM 2811	KDM 28111*	KDM 2821	KDM 2826	KDM 2861*
Capacity (Short Tons)		0.25	2	2	2	2	3	5	5	10	10	20	25	50
A		Raise + 2 3/8	Raise + 3	Raise + 3 5/8	Raise + 3 1/6	Raise + 3 5/8	Raise + 3.75	Raise + 4 5/8	Raise + 4	Raise + 6	Raise + 5	Raise + 8	Raise + 10	Raise + 15
B		0.625	1.125	1.125	1.125	1.125	1.125	1	1	1	1	2.5	2.25	3.25
C		2.375	3.75	3.75	3.75	3.75	3.75	5.25	5.25	5	5	7.125	8.875	11
D		0	0.625	0.625	0.625	0.625	1	0.75	0.75	1.125	1.125	1.625	2.5	2.5
F	Dia.	0.437	0.750	0.750	0.750	0.750	0.750	1.000	1.000	1.000	1.000	1.750	2.250	3.250
		0.435	0.748	0.748	0.748	0.748	0.748	0.998	0.998	0.998	0.998	1.748	2.248	3.248
G		1.75	2 3/8	3 1/32	2 3/8	3 1/32	3.395	4.33	3.65	4.33	3.65	6.706	9.395	12.625
H		0.53125	0.630	0.630	0.630	0.630	0.832	0.895	1.02	0.895	1.02	1.582	2.02	2.02
I	Dia.	2.625	3.25	3.25	3.25	3.25	4.2	4 15/16	4 15/16	4 15/16	4 15/16	5.375	7.375	9.75
	Holes	4	4	4	4	4	4	4	4	4	4	6	8	6
J	Dia.	17/64	17/64	17/64	17/64	17/64	25/64	17/32	17/32	17/32	17/32	21/32	25/32	1 1/32
	P.C.D	2 3/32	2.75	2.75	2.75	2.75	3 7/16	4 1/16	4 1/8	4 1/16	4 1/8	4.375	6.25	8
K	Dia.	1 SQR.	1.5 SQR.	1.5 SQR.	1.5 SQR.	1.5 SQR.	2.125	2.625	2.25 SQR.	2.625	2.25 SQR.	3.375	4.751	5.88

Note *Dimensions subject to change without notice.* ** 1" Lead Screw Models.*

1.3.2.7. Double Clevis End Imperial Ball Screw Actuators

Note *For other performance and dimension information refer to translating ball screw models.*

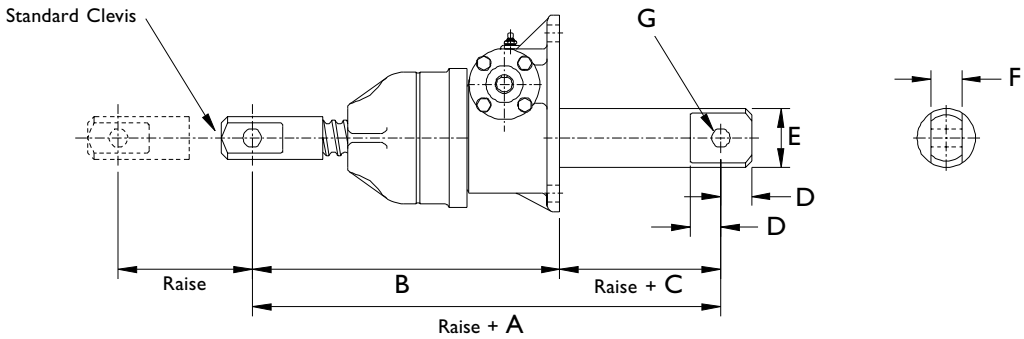

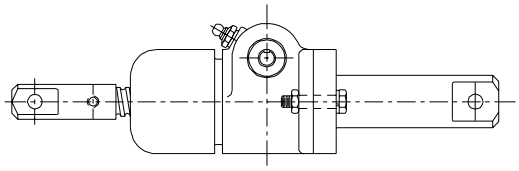

Style 1

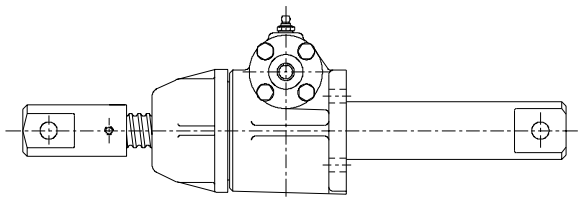

Style 2

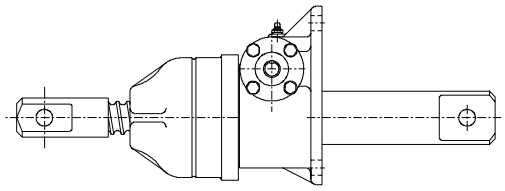

Style 3

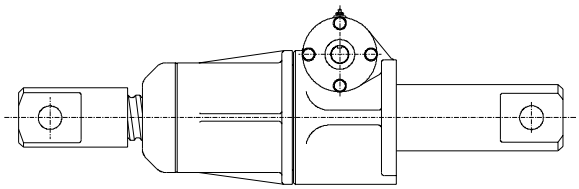

Style 4

Model		CCM 28631	CCM 2802 & 28021	CCM 9802 & 98021	CCM 28003	CCM 2805 & 28051	CCM 2810 & 28101	CCM 2820	CCM 2825	CCM 2860
Capacity (Short Tons)		0.5	2	2	3	5	10	20	25	50
Style		1	2	3	2	3	3	3	3	4
A		8.25	11.125	11.125	12.875	16.25	16	23	30.25	37.125
B		6	8.625	8.625	10.375	12.5	12.125	19	23.25	29.125
C		2.25	2.5	2.5	2.5	3.75	3.875	4	7	8
D		0.5	0.75	0.75	0.75	1.25	1.25	1.5	2.5	2.625
E		1.125	1.625	1.625	1.75	2.375	2.875	3.5	4.5	5.5625
F		0.75	1	1	1	1.25	1.5	1.75	2.75	3.75
G	Diag	5/16	0.5	0.5	0.5	0.75	1	1.25	1.5	2
Max. Allowable Raise in	Raise	7.875	15	15	15.5	20.375	20.5	34.5	47	63.5
Compression at Load (lb)	Load	1000	3800	3800	4200	7400	7400	20000	35000	61000
Max Raise At Rated Load (Compression)		7.875	14.5	14.5	11.5	16	9.5	21.5	37	47.5

Note 1. *All dimensions in inches unless otherwise stated (1" = 25.4 mm).*
2. *Dimensions subject to change without notice.*

1.3.2.8. Imperial Ball Screw Actuators with Bellows Boots

Features

- Protects the screw from dust and dirt.
- Helps maintain the proper lubrication.
- Guards against moisture and corrosive contaminants.
- Boots are made of neoprene-coated nylon with sewn construction. Other materials are available for applications involving high temperatures, highly corrosive atmospheres and other special conditions.

Boot Installation Data

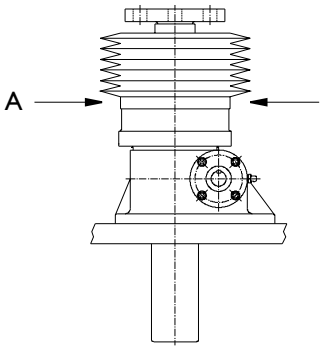

Capacity	1000 lb	2 Ton	3 Ton	5 Ton
Shell Cap Diameter "A"	2.25	3.5	3.5	5.375

Capacity	10 Ton	20 Ton	25 Ton	50 Ton
Shell Cap Diameter "A"	4.5	7	8.875	9.5

Note *For horizontal installation exceeding 18" of travel, internal boot guides are recommended.*

Upright Imperial Ball Screw Actuators with Bellows Boots

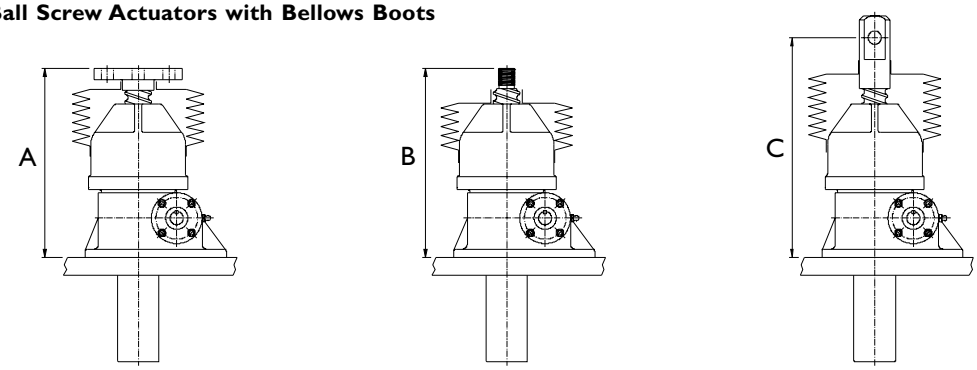

Closed Height "B"		Raise							
Model No.	Boot O.D.	1-12"	18"	24"	30"	36"	48"	60"	72"
28631	4.50	5.000	-	-	-	-	-	-	-
2802	6.63	7.500	7.500	7.500	8.500	-	-	-	-
28021	6.63	7.500	7.500	7.500	8.500	-	-	-	-
9802	6.63	7.500	7.500	7.500	8.500	-	-	-	-
98021	6.63	7.500	7.500	7.500	8.500	-	-	-	-
28003	6.63	9.250	9.250	9.250	10.250	10.250	11.250	-	-
2805	7.50	10.750	10.750	10.750	12.500	12.500	13.750	-	-
28051	7.50	10.750	10.750	10.750	12.500	12.500	13.750	-	-
2810	7.00	10.375	10.375	10.375	11.625	11.625	12.875	-	-
28101	7.00	10.375	10.375	10.375	11.625	11.625	12.875	-	-
2820	9.00	16.500	16.500	16.500	16.500	16.500	18.500	20.500	21.500
2825	11.00	19.750	19.750	19.750	19.750	19.750	21.250	22.750	24.250
2860	12.00	25.375	25.375	25.375	25.375	25.375	26.375	27.375	28.375

Note
1. *(-) indicates "Not Applicable".*
2. *For lengths of raise not detailed in the above table consult Power Jacks Ltd.*
3. *All dimensions in inches (1" = 25.4 mm).*
4. *Dimensions subject to change without notice.*

Inverted Imperial Ball Screw Actuators with Bellows Boots

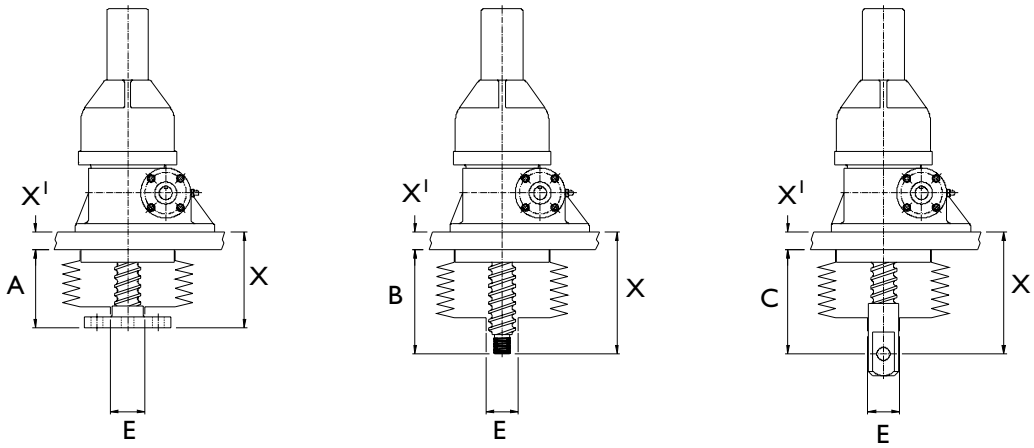

Finding minimum closed dimensions (X)

- Add your structure thickness X' to A, B, or C from the appropriate chart to find the minimum closed dimension.
- Other styles and sizes of boots can be supplied.
- In order to use a standard boot, make the mounting plate diameter the same as the shell cap diameter of the appropriate actuator.
- When boots are required for rotating screw actuators, consult Power Jacks Ltd.

Model No.	Raise (inches)												Std. Boot Collar Dia
	1"-6"			7"-12"			13"-18"			19"-24"			
	A	B	C	A	B	C	A	B	C	A	B	C	E
28630	2	2	2 3/4	2 3/8	2 3/8	3 1/4	2 3/4	2 3/4	3 3/4	3 1/4	3 1/4	4 1/4	.75
2801 & 9801	4 3/16	4 5/8	5 1/4	4 3/16	4 5/8	5 1/4	4 3/16	4 5/8	5 1/4	4 3/16	4 5/8	5 1/4	1.5
28002	4 3/16	4 5/8	5 1/4	4 3/16	4 5/8	5 1/4	4 3/16	4 5/8	5 1/4	4 3/16	4 5/8	5 1/4	1.5
9804	4 3/16	5 1/8	6 1/8	4 5/8	5 1/8	6 1/8	4 5/8	5 1/8	6 1/8	4 5/8	5 1/8	6 1/8	1.75
9809	4 3/4	5 1/8	6 1/8	4 3/4	5 1/8	6 1/8	4 3/4	5 1/8	6 1/8	4 3/4	5 1/8	6 1/8	1.5
9819	6 3/4	8	9 3/4	6 3/4	8	9 3/4	6 3/4	8	9 3/4	6 3/4	8	9 3/4	2.615
9824	5 1/2	6 3/4	9 1/2	5 1/2	6 3/4	9 1/2	5 1/2	6 3/4	9 1/2	5 1/2	6 3/4	9 1/2	3.5
2859	7 1/4	7 1/4	10 7/8	7 1/4	7 1/4	10 7/8	7 1/4	7 1/4	10 7/8	7 1/4	7 1/4	10 7/8	4.5

Mounting Plate

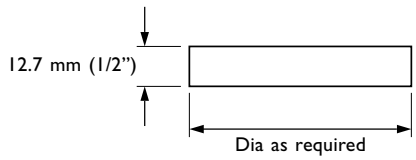

To be manufactured by installer

Note 1. *For lengths of raise not detailed in the above table consult Power Jacks Ltd.*
2. *Dimensions subject to change without notice.*
4. *All dimensions in inches.*

1.3.2.9. Standard Imperial Ball Screw Actuator Flange Bolt Configuration

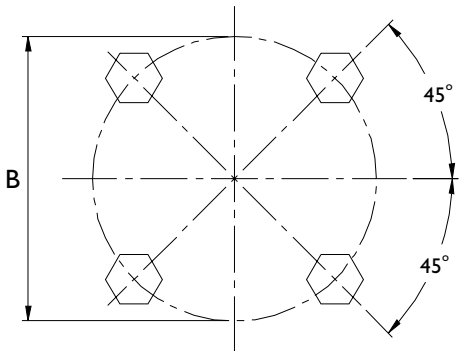

Model	'B' Bolt P.C.D (inch)	Bolt Information
28631	-	No Flange Bolts
2802 & 9802	1 11/16	1/4 - 20 x 3/4" Long
28003	1 11/16	1/4 - 20 x 3/4" Long
2805	2 3/8	5/16 - 18 x 3/4" Long
2810	2 3/4	5/16 - 18 x 3/4" Long
2820	3 1/2	3/8 - 16 x 1 1/4" Long
2825	4 1/8	3/8 - 16 x 1 1/4" Long
2860	5 1/4	5/8 - 11 x 1 1/2" Long

Note *1. All dimensions in inches (1" = 25.4 mm).*
2. Dimensions subject to change without notice.

1.3.2.10. Motor Adaptors for Imperial Ball Screw Actuators

Dimensions and details are the same as for imperial machine screw actuators.

Please refer to section 1.2.3.9.

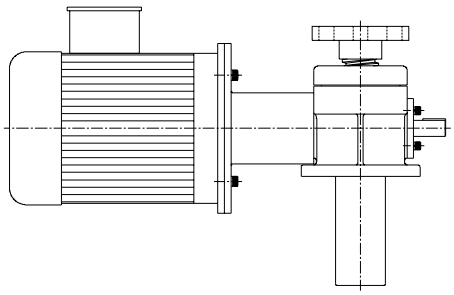

1.3.2.11. Rotary Limit Switch Adaptors for Imperial Ball Screw Actuators

Dimensions and details are the same as for imperial machine screw actuators.

Please refer to section 1.2.3.10. and 1.2.3.11.

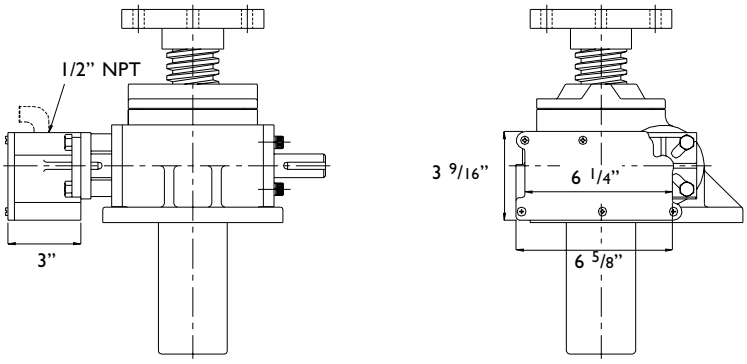

Actuator Mounted

1.4. High Duty Cycle and Special Screw Jacks

1.4.1. High Duty Roller Screw Jacks

An extensive range of axially translating and rotating screw jacks fitted with the patented ***Spiracon*** roller screw and designed specifically to customers' application requirements. The ***Spiracon*** roller screw is an extremely high performance screw mechanism exhibiting almost no axial backlash and is designed to meet the following demands:

- High precision and repeatable positioning
- High speed
- High dynamic load capacity
- Continuous duty
- High efficiency
- Long life
- Minimum maintenance requirements

The range covers lifting capacities up to 1200 kN with many design features available to meet the customers' particular requirements.

The units' gearbox is based on the standard range of power Jacks screw jacks, although other gearbox types can be designed for specific applications. The gearboxes are either grease or oil lubricated depending on the application. The roller screw is based around the standard Spiracon planetary roller screw range (refer to section 3.1. for full Spiracon Roller Screw details) with alternative nut housings available to meet the requirements of specific applications.

1.4.2. High Duty Cycle Ball Screw Jacks

Advantages

- Predictable Life
- Continuous Operation
- Oil Lubricated
- High mechanical and thermal efficiency
- 12 Models available
- Capacity 3,500 lb (15,500 kN) to 27,000 lb (120,000 kN)

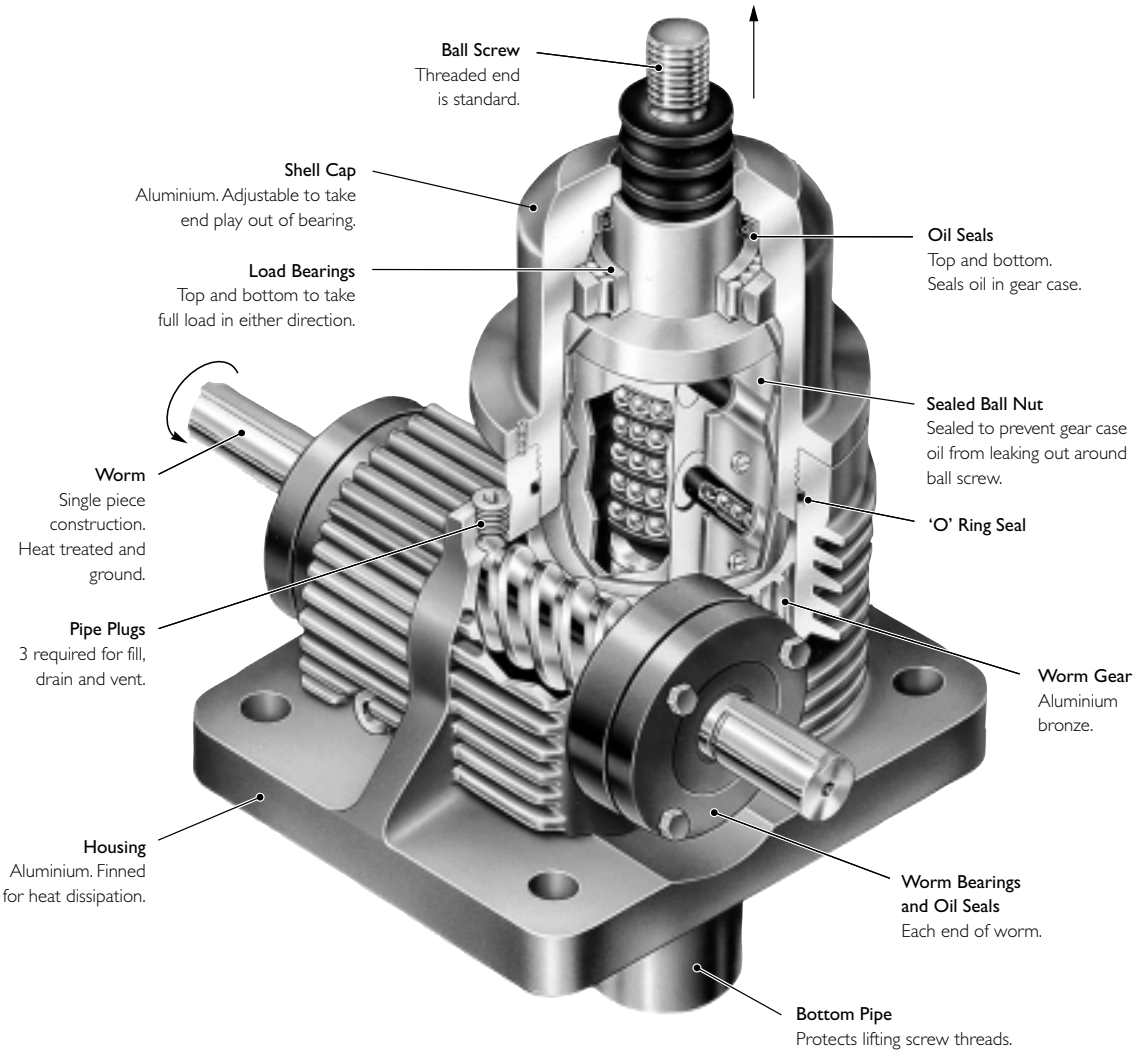

The 7500 Series high duty cycle actuators are specifically designed for continuous operation within certain load limitations (consult Power Jacks). The precision worm gear set operates in an oil bath improves thermal efficiency.

In addition, the precision drive arrangement permits the accurate prediction of operating life, in terms of millions of inches of travel. This important feature allows optimum maintenance and replacement scheduling, so as to minimise downtime.

Consult Power Jacks for Life Expectancy graph which is accurate for units installed with good alignment, minimal side loading, and operated in a relatively clean environment.

For further details contact Power Jacks.

1.4.3. Special Screw Jacks (Mechanical Actuators)

1.4.3.1. Special Screw Jack Designs

The special actuators can be broken down into three categories:

1. Modifications to the standard actuators

   This would include non-standard painting or plating of the housing, 2 or 3 start threaded lifting screws, stainless steel lifting screws or worm shafts, increased closed heights, extended worm shafts, opposite threading of lifting screws, etc.

2. Additions to the standard actuators

   Items such as wear indicators, safety nuts, rotation monitoring kits, special lifting screw end fittings, encoder adapter flanges, etc.

3. Completely special actuators

   Where a modification of our existing range is not practical we have the facilities to design and manufacture actuators tailored specifically to your requirements.

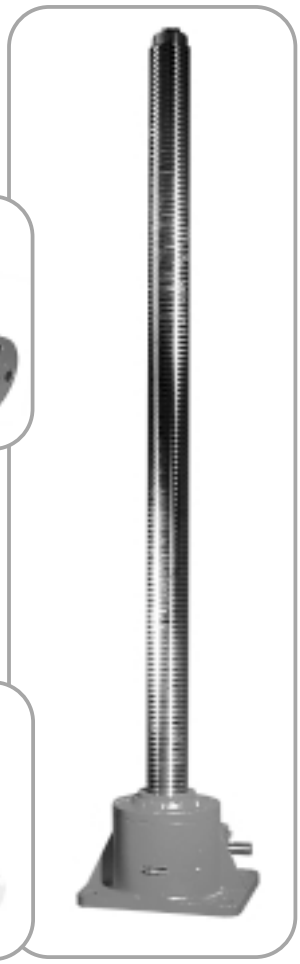

1.4.3.2. Anode Screw Jacks

Power Jacks design and manufacture Anode Screw Jacks and their systems for aluminium smelting anodes. The complete anode jacking system including motors, gearboxes, drive shafts and couplings can be supplied. The screw jacks are a specialheavy duty variant of the standard screw jack, these Anode Screw Jacks incorporate features such as:

- Extended protection pipe (top and bottom)
- High temperature grease
- Hexagonal drive ends (no keys)
- Double bearing arrangement for worm shaft; plain bearings plus thrust roller nearings
- One piece rod end and lifting screw (forged)
- High temperature bright aluminium paint work
- operating temperature 0° C → +90° C

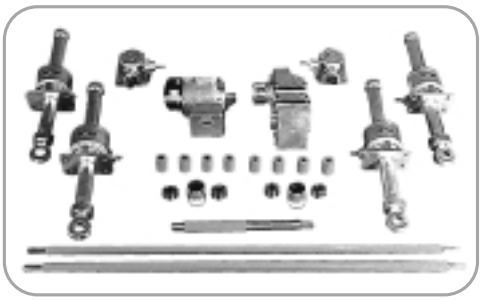

These screw jacks are designed with a large overload capacity to cope with:

1. Side load stresses caused by thermal expansion and contraction of the anode frames.
2. High compressive over loads caused by frozen pots.

1.4.3.2.1. Examples of Special Actuators

Power Jacks can adapt the standard actuator to meet your special requirements.

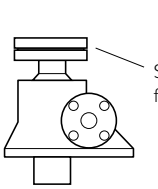

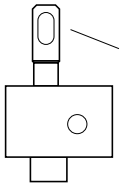

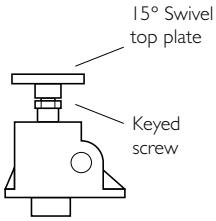

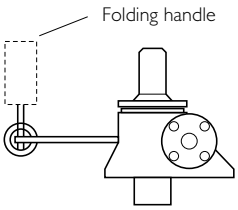

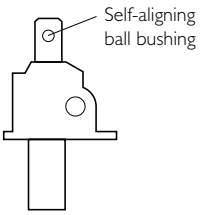

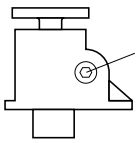

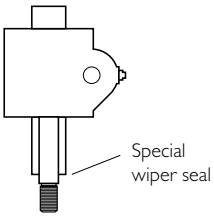

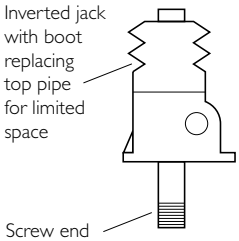

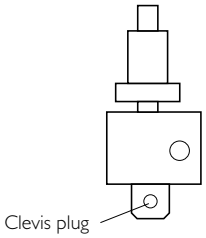

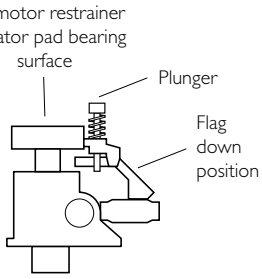

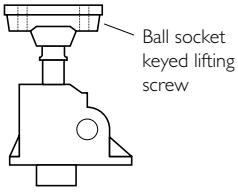

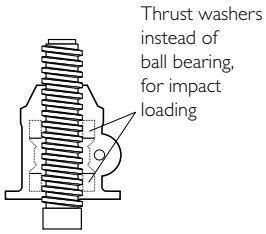

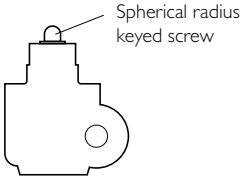

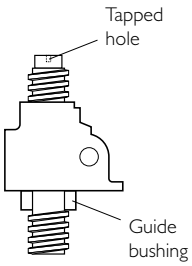

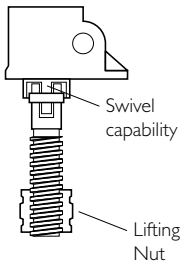

Keyed inverted anti-backlash

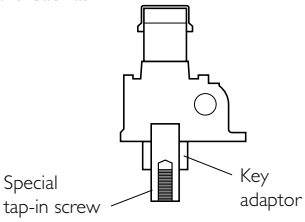

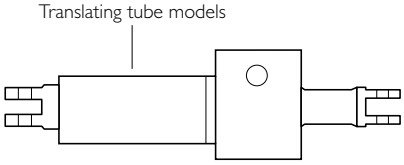

1.5. Engineering Guide

Contents

1.5.1. Actuator Performance

1.5.1.1. Actuator Column Buckling Charts

Column Length Correction Factors, F_{cb}

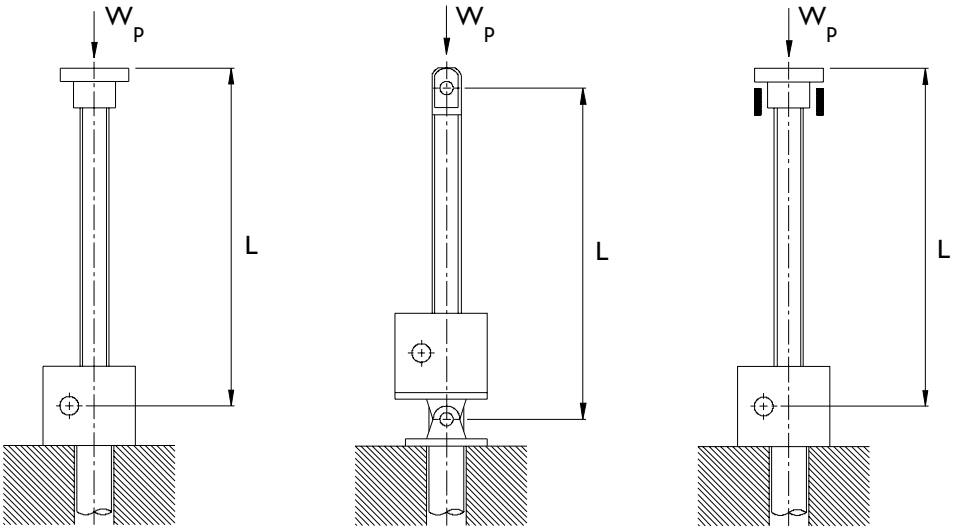

Fixed/Free *Pinned/pinned* *Fixed/Guided*

Note 1. *Column end constraints based on A.I.S.C. recommended values.*

2. *All actuator column buckling charts show a Euler buckling curve and three scales for the appropriator end condition for the application under analysis.*

Important Notes for Sym-metric and Metric Actuators:

1. All Sym-metric and Metric actuator buckling charts are rated for industrial cargo with a safety factor of 3.5.
2. For human cargo a safety factor of 5 is recommended. To alter the permissible compressive load (W_P) for human cargo multiply the load selected from the chart by 0.7 e.g. $W_{PHC} = W_P$ *0.7.

1.5.1.1.1. Sym-metric and Metric Machine Screw Actuator Column Buckling Charts

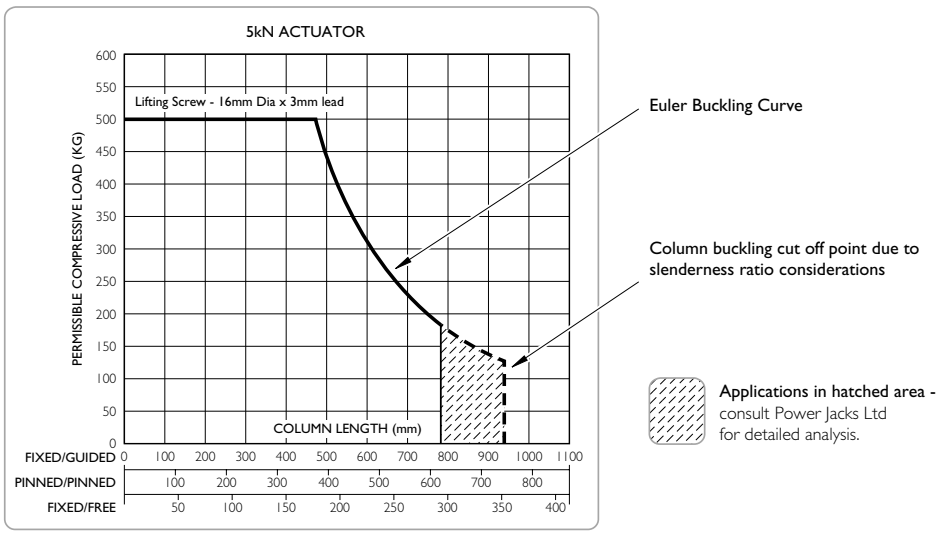

Sym-metric and Metric Machine Screw Actuator Column Buckling Charts (cont)

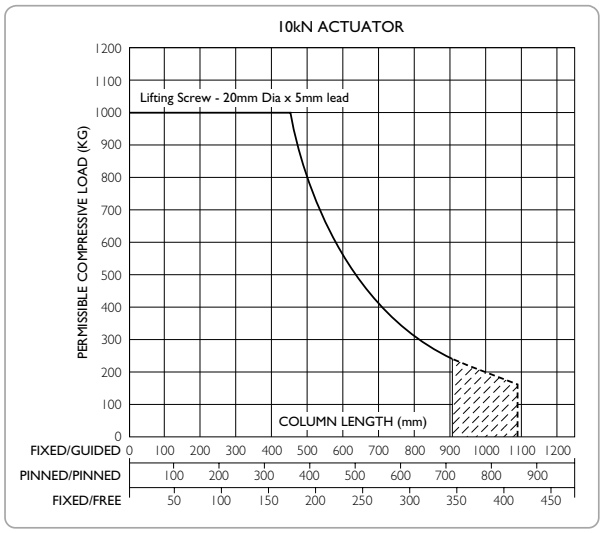

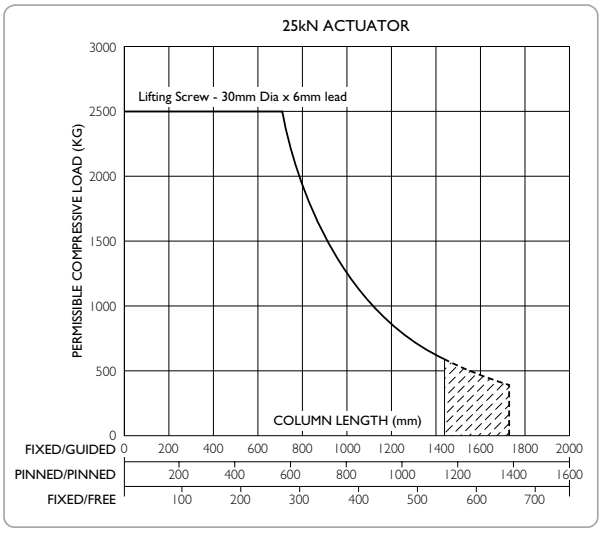

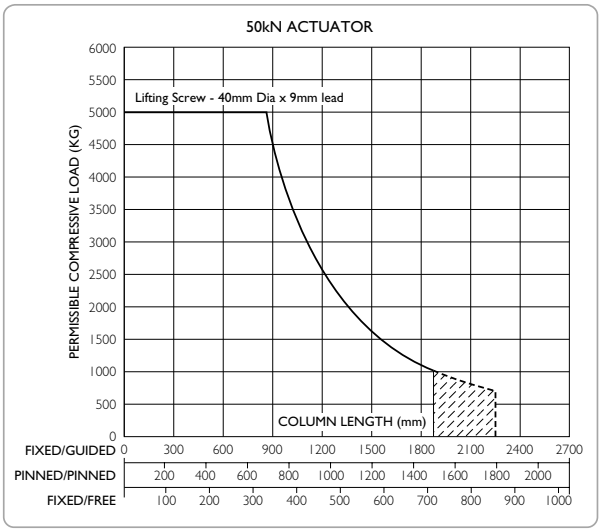

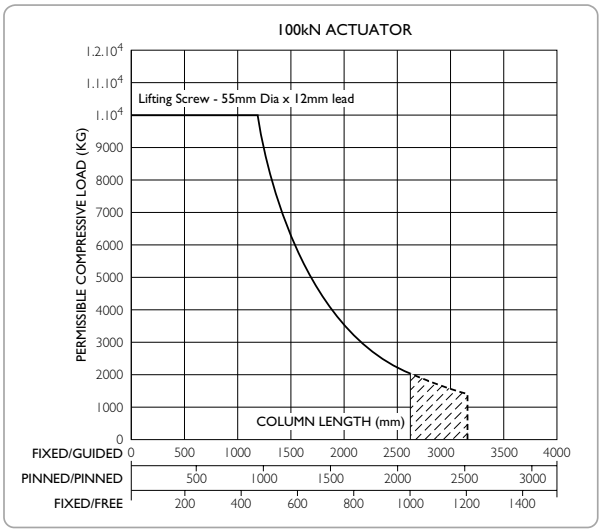

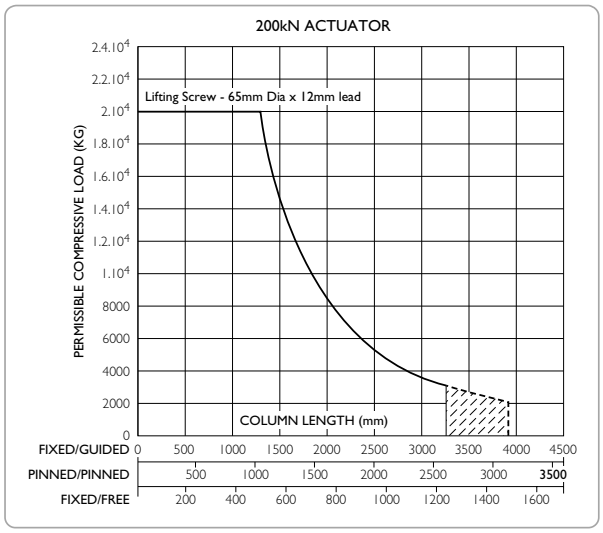

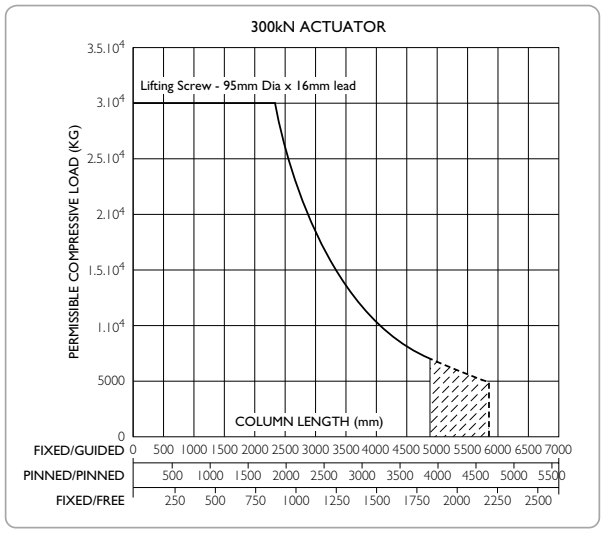

Sym-metric and Metric Machine Screw Actuator Column Buckling Charts (continued)

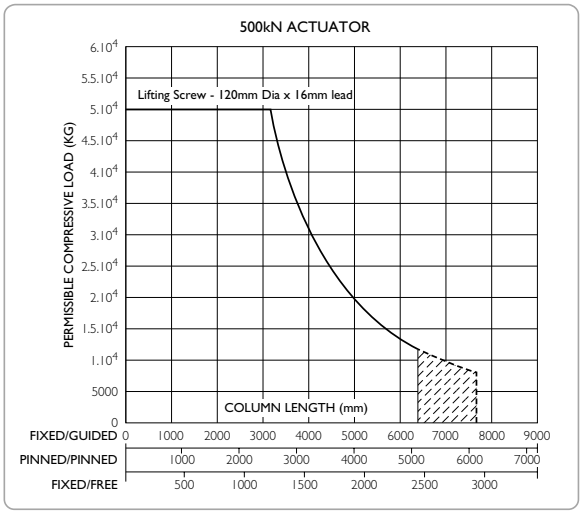

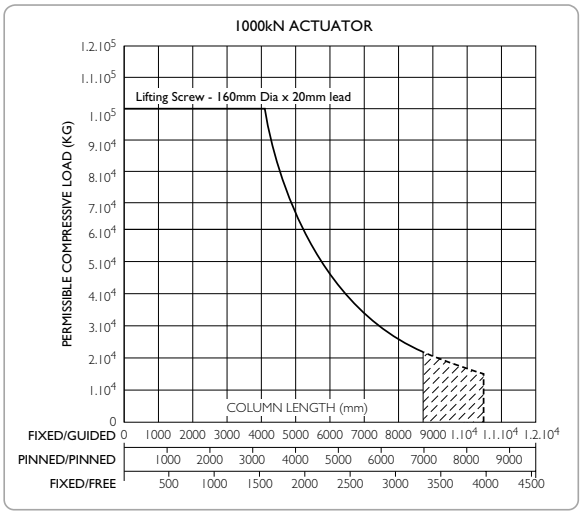

1.5.1.1.2. Metric Ball Screw Actuator Column Buckling Charts

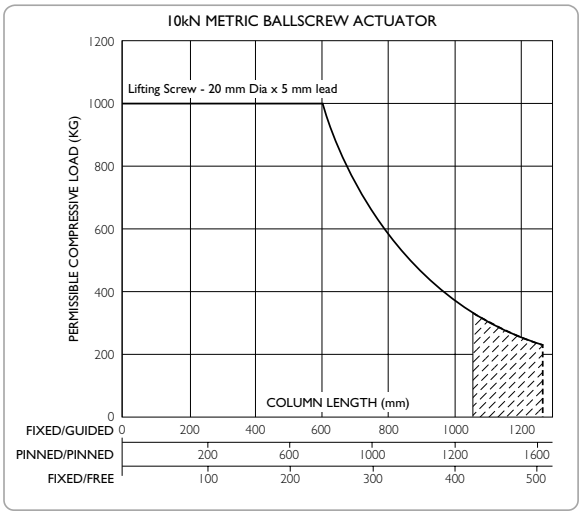

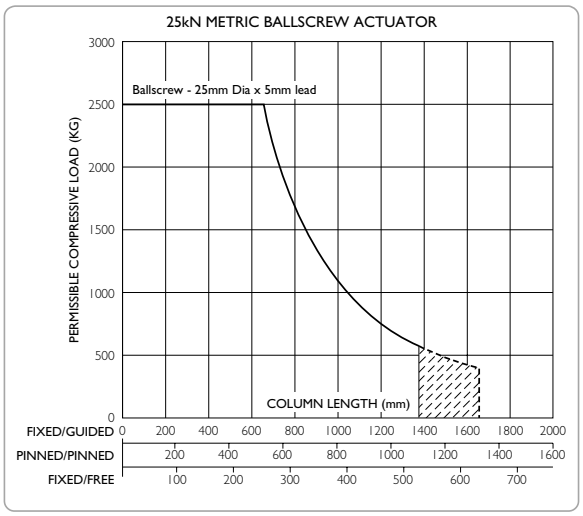

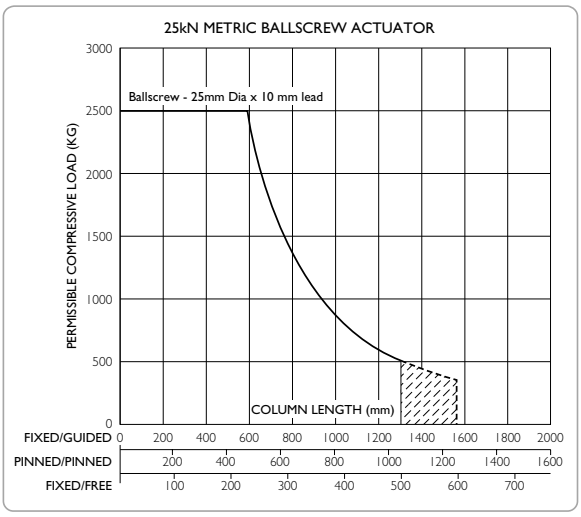

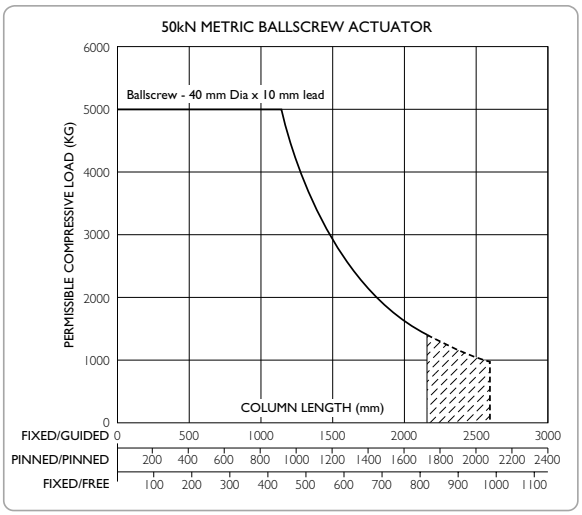

Metric Ball Screw Actuator Column Buckling Charts (continued)

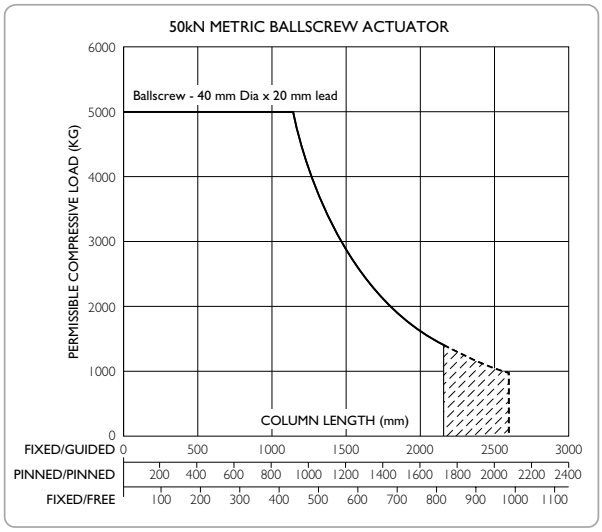

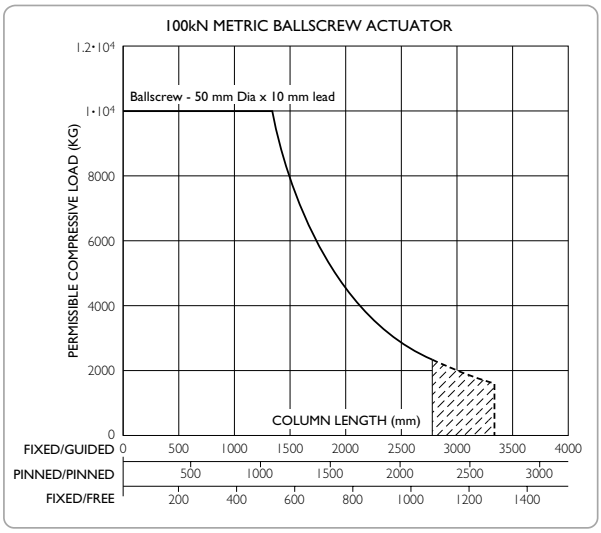

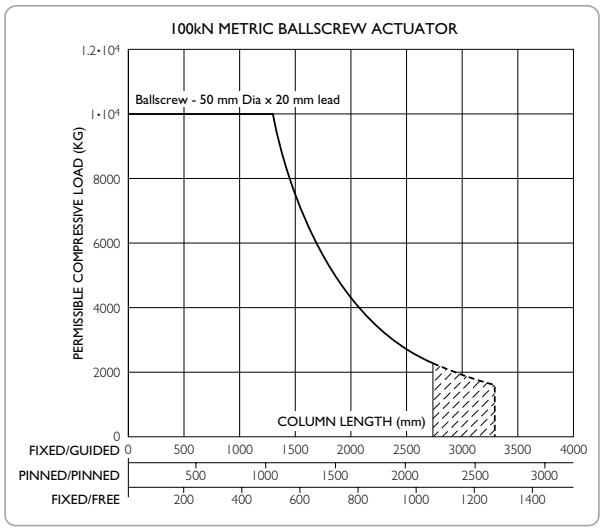

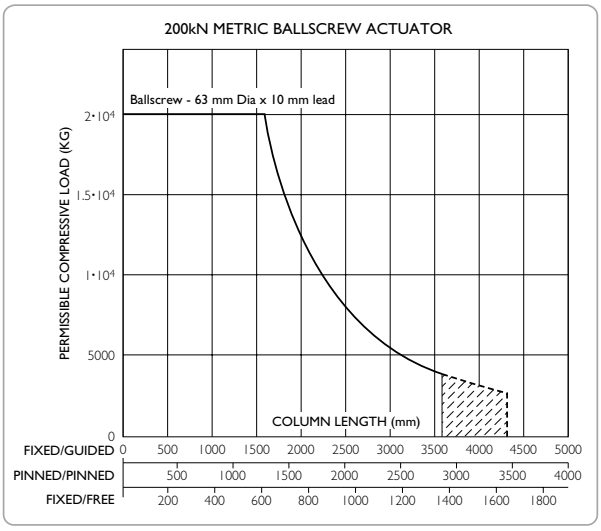

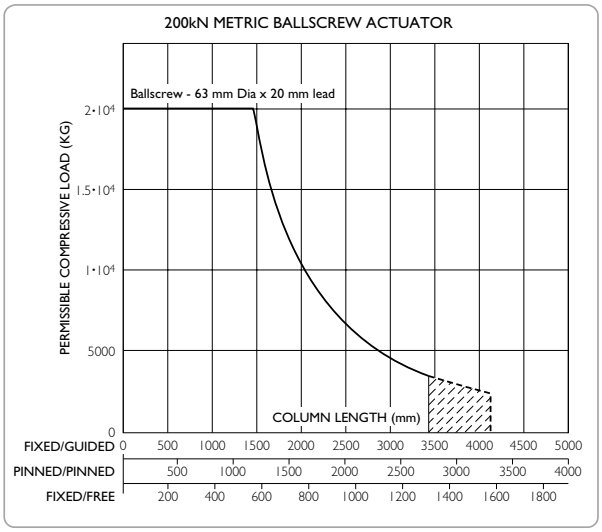

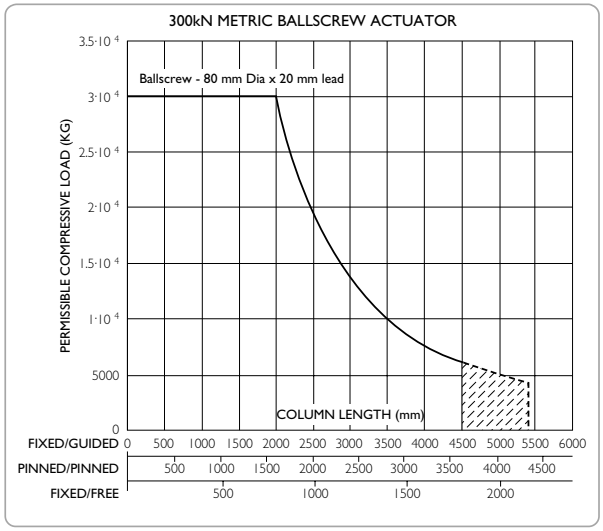

1.5.1.1.3. Imperial Ball Screw Actuator Column Buckling Charts

Important Notes for Ball Screw Actuators Only:

Actual Load	Actual Load on any actuator should never exceed the catalogue rated load.
Safety Factors	The charts show theoretical Euler buckling curves and suitable safety factors must be chosen by the customer from appropriate A.I.S.C. or other standards, for advice consult Power Jacks.
Maximum Screw Length	Determined by the column slenderness ratio (200) and regardless of load.
End Constraints	Fixed/Guided and Fixed/free are illustrated, for Pinned/Pinned consult Power Jacks.

Selection:

1. Select safety factor form A.I.S.C. or other applicable standards suitable for actuator application.
2. Multiply load by the safety factor to determine failure load.
3. Locate failure on vertical axis.
4. Locate screw length on appropriate horizontal axis.
5. Project horizontally right from failure load and vertically up from screw length to where projections intersect.
6. Any actuator with its curve above the intersection is suitable for the application provided that the actuator's load rating and its maximum permissible screw length are not exceeded.

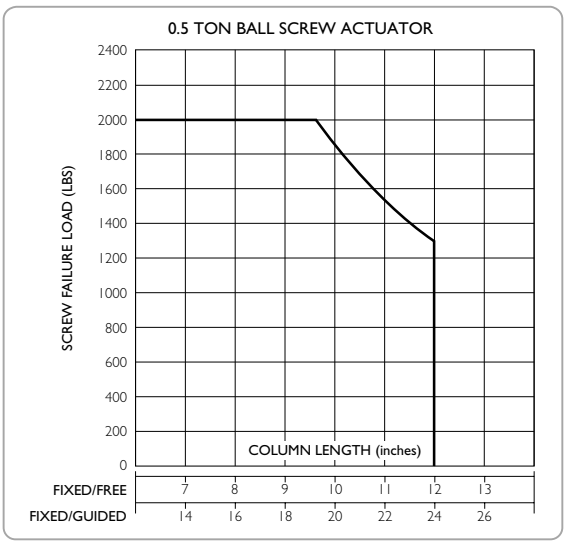

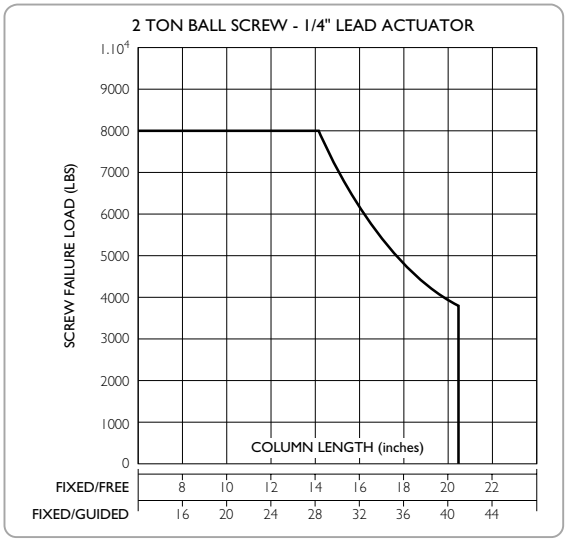

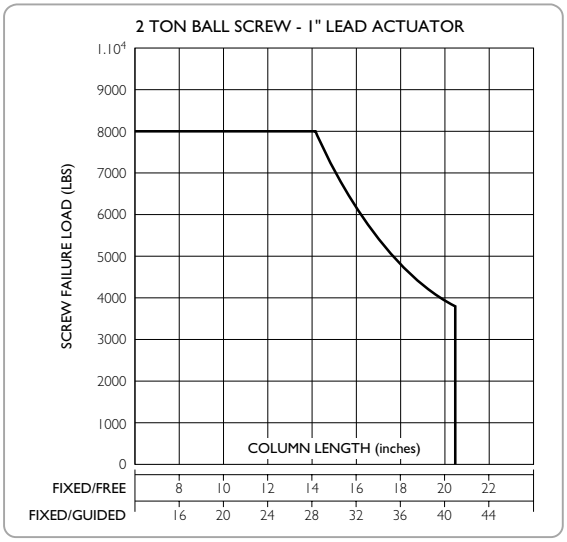

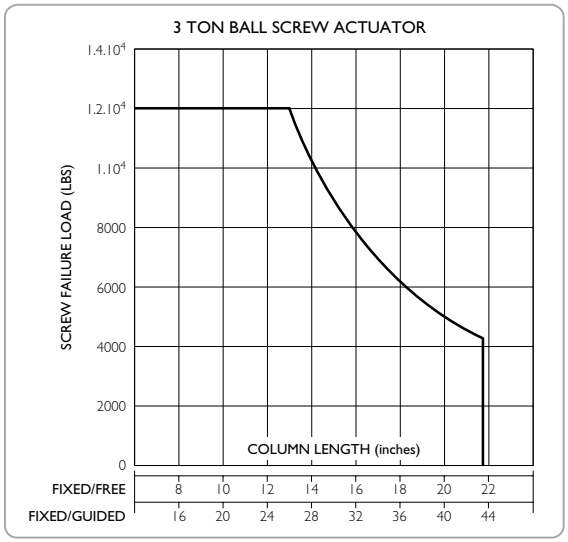

Imperial Ball Screw Actuator Column Buckling Charts (continued)

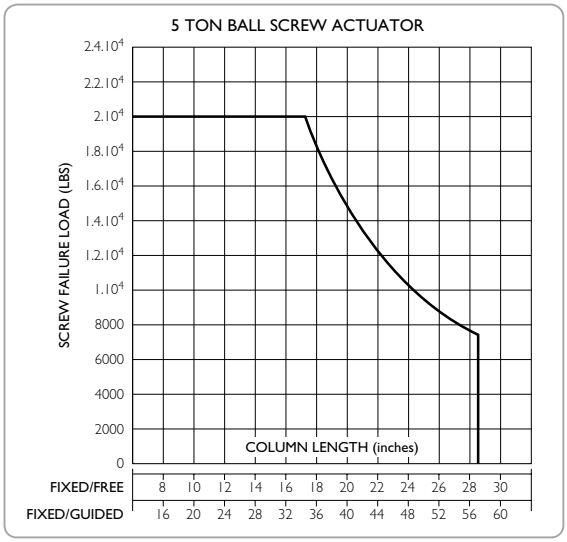

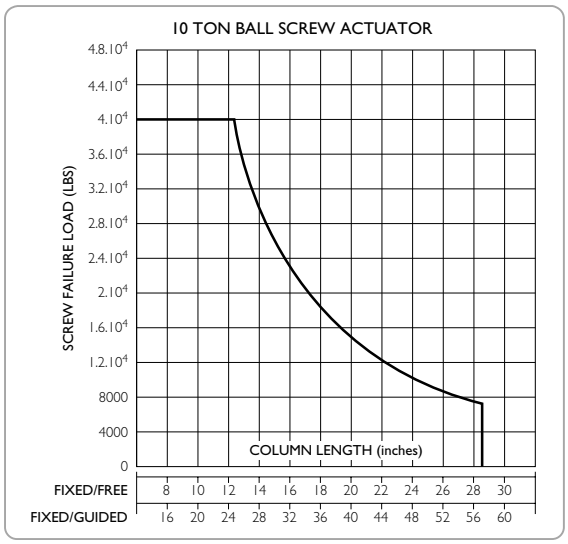

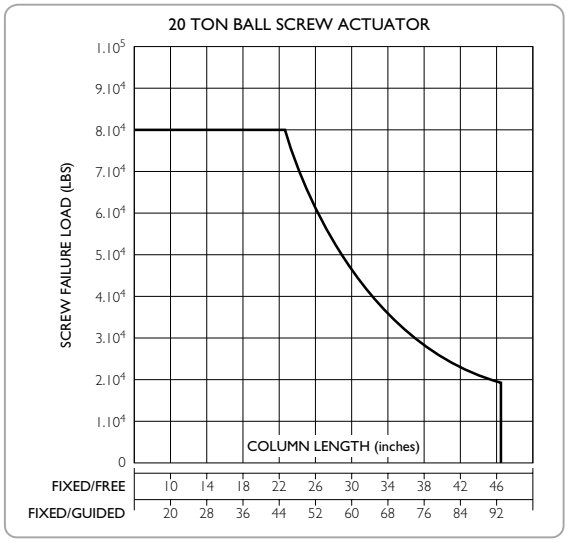

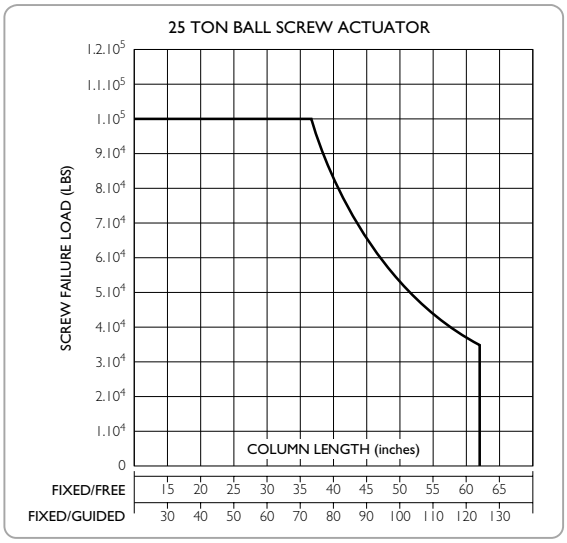

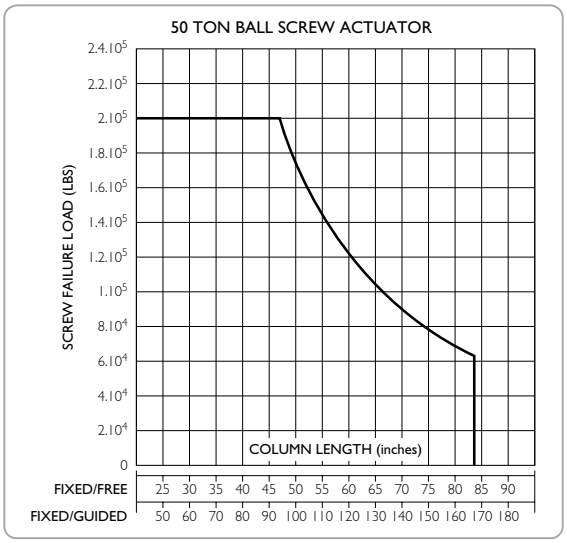

1.5.1.2. Sym-metric and Metric Machine Screw Critical Screw Speed

Critical Screw Speed Factors, F_{cs}

Fixed/Free, F_{cs} = 0.15

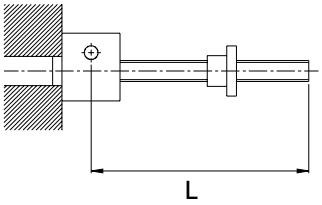

Fixed/Supported, F_{cs} = 0.7

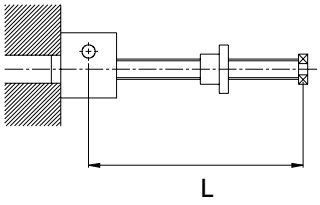

Fixed/Fixed, F_{cs} = 1

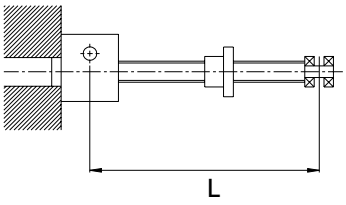

Note *Both Sym-metric and metric machine screw actuators use metric machine screws.*

Sym-metric and Metric Machine Screw Critical Screw Speed (Shaft Whirling)

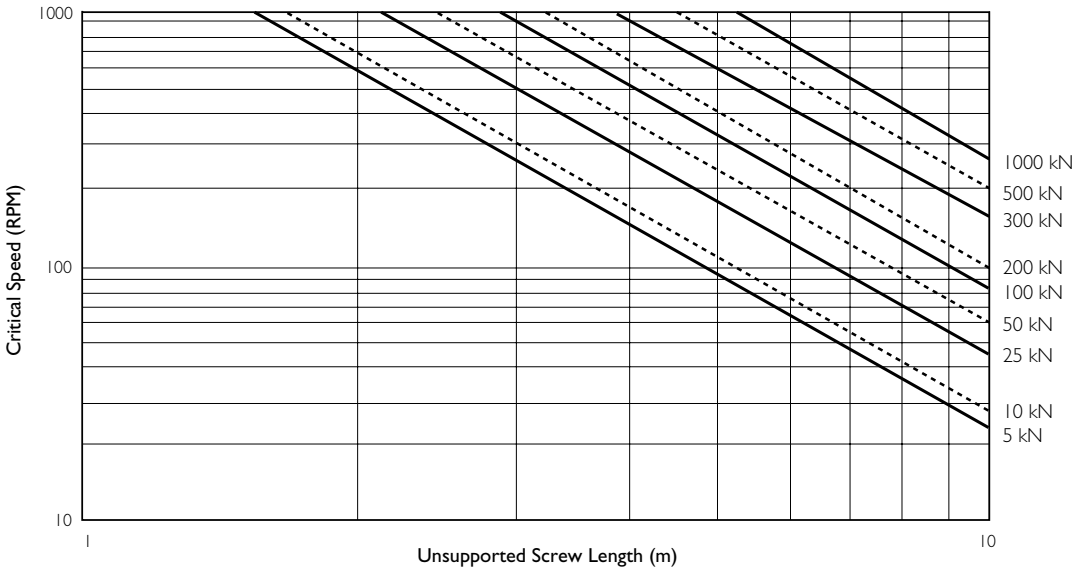

Based on both ends fixed and 80% of the critical speed.

1.5.1.3. Metric Ball Screw Critical Screw Speed

Critical Screw Speed Factors, F_{cs} *- refer to 1.5.1.2. for factor values and diagrams*

Metric Ball Screw Critical Screw Speed (Shaft Whirling)

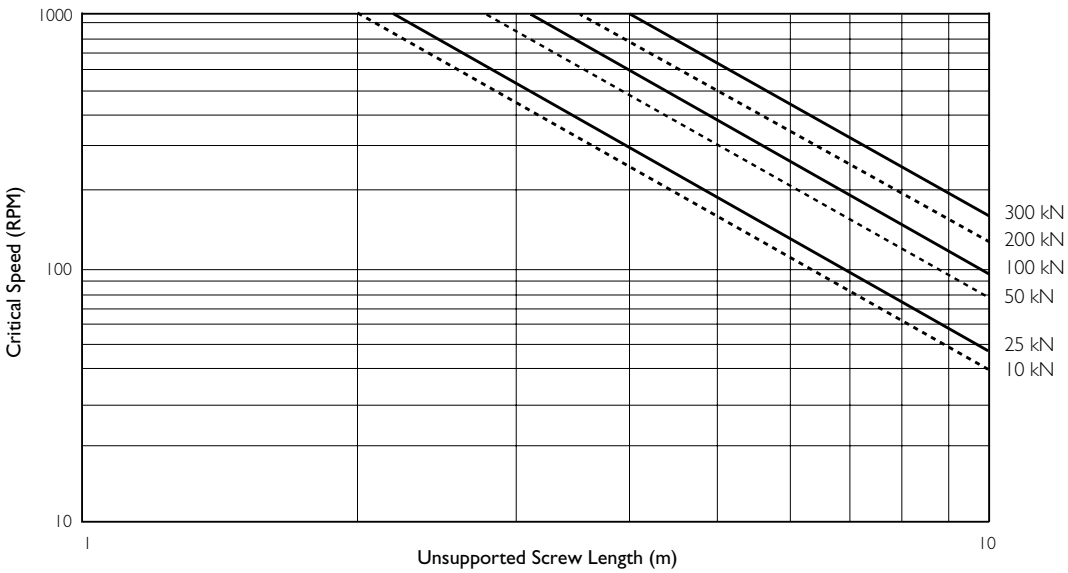

Based on both ends fixed and 80% of the critical speed.

1.5.1.4. Imperial Ball Screw Critical Screw Speed

Critical Screw Speed Factors, F_{cs} *- refer to 1.5.1.2. for factor values and diagrams*

Imperial Ball Screw Critical Screw Speed (Shaft Whirling)

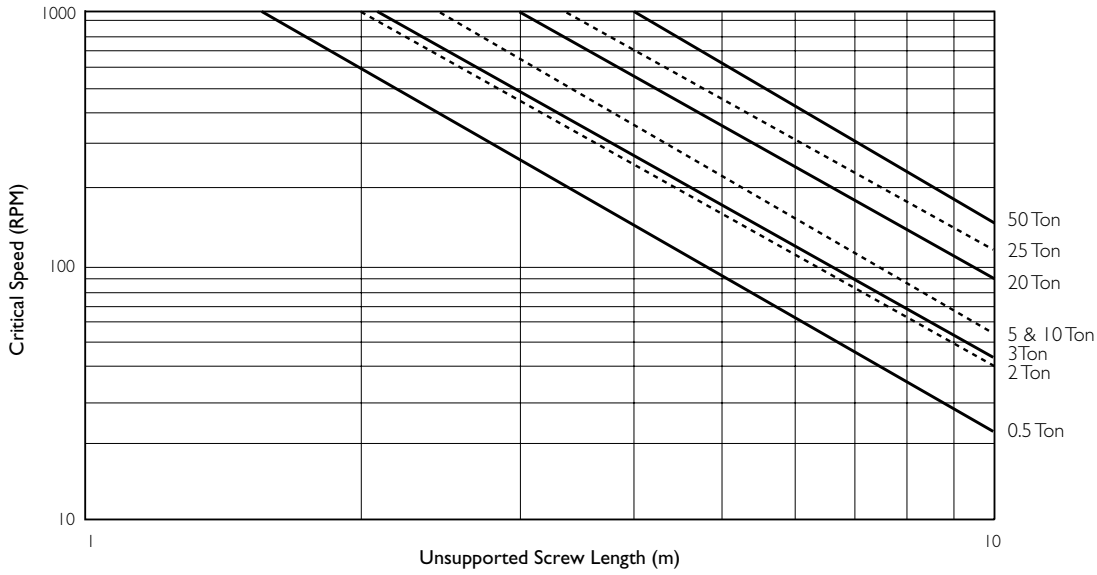

Based on both ends fixed and 80% of the critical speed.

1.5.1.5. Actuator Key Torque

The key torque is caused by the tendency of the lifting screw to rotate. It is a function of the screw lead, screw efficiency and the load and is not affected by the actuator unit gear ratio.

Note *The values below are given at rated load. For a smaller load reduce the key torque in direct proportion.*

Sym-Metric & Metric Actuator Machine Screws			
Rating (kN)	Screw Diam. (m)	Lead (m)	Key Torque (Nm)
5	16	0.003	8
5	16	0.006	11
10	20	0.005	22
10	20	0.010	30
25	30	0.006	76
25	30	0.012	102
50	40	0.009	210
50	40	0.018	290
100	55	0.012	575
100	55	0.024	780
200	65	0.012	1300
200	65	0.024	1705
300	95	0.016	2805
300	95	0.032	3610
500	120	0.016	5645
500	120	0.032	6975
1000	160	0.020	14890
1000	160	0.040	18220

Metric Ball Screw Actuators			
Rating (kN)	Screw Diam. (m)	Lead (m)	Key Torque (Nm)
10	20	0.005	9
10	-	-	-
25	25	0.005	23
25	25	0.01	43
50	40	0.01	88
50	40	0.02	167
100	50	0.01	181
100	50	0.02	340
200	63	0.01	370
200	63	0.02	690
300	80	0.02	1030
300	-	-	-
500	-	-	-
500	-	-	-

-

Imperial Actuator Machine Screws			
Rating (Short Ton)	Screw Diam. (m)	Lead (inch)	Key Torque (lbf *inch)
0.25	0.5	0.250	40
0.5	0.625	0.125	70
1	0.75	0.250	175
2	1	0.250	460
5	1.5	0.375	1750
10	2	0.500	4700
15	2.25	0.500	7580
20	2.5	0.500	10625
25	3	0.666	14000
35	3.75	0.666	26500
50	4.5	0.666	47110
75	5	0.666	73000
100	6	0.750	118200
150	7	1.000	216000
250	9	1.000	423300

Imperial Actuator Ball Screws			
Rating (Short Ton)	Screw Diam. (inch)	Lead (inch)	Key Torque (lbf*inch)
0.5	0.625	0.200	35
2	1	0.250	175
2	1	1.000	700
3	1 11/64	0.413	440
5	1.5	0.474	850
5	1.5	1.000	1800
10	1.5	0.474	1700
10	1.5	1.000	3500
20	2.25	0.500	3500
25	3	0.660	6000
50	4	1.000	17700

1.5.1.6. Maximum Actuator Side Load Ratings with Full Actuator Rated Load in Tension

Machine Screw Actuators

Sym-metric & Metric Machine Screw Actuator									
Actuator Rating (kN)	5	10	25	50	100	200	300	500	1000
Max. Side Load 300 mm Offset (N)	100	150	540	1130	2900	3350	17500	37800	83400

Imperial Machine Screw Actuator														
Actuator Rating (Short Ton)	0.25	0.5	1	2	5	10	15	20	25	35	50	75	100	150
Max. Side Load 1 ft Offset (lbf)	**	20	28	75	300	600	800	1000	3400	4400	8600	10000	17500	23000

Ball Screw Actuators

Metric Ball Screw Actuator											
Actuator Rating (kN)	10	25	25	50	50	100	100	200	200	300	500
Metric Ball Lead (mm)	5	5	10	10	20	10	20	10	20	20	*
Max. Side Load 300 mm Offset (N)	105	195	195	980	980	1570	1570	2060	2060	4340	*

Imperial Ball Screw Actuator												
Actuator Rating (Short Ton)		0.5	2	2	3	5	5	10	10	20	25	50
Imperial Ball Screw Lead (inch)		0.2	0.25	1	0.413	0.474	1	0.474	1	0.5	0.66	1
Max. Side Load 1ft	(lbf)	15	75	75	125	280	280	135	135	800	1915	4400
Offset	(N)	67	335	335	555	1245	1245	600	600	3560	8520	19570

** Consult Power Jacks Ltd.*
*** Maximum side load 10 lbs at 400 lb load for 1 foot offset.*

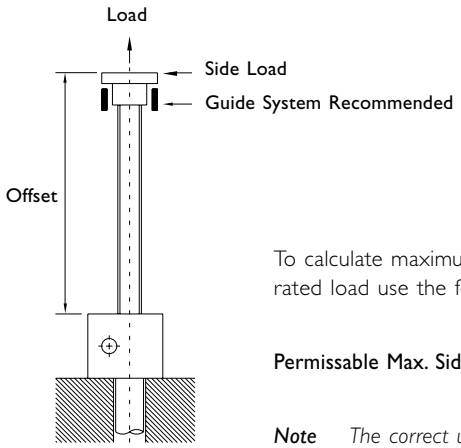

To calculate maximum side load for different raises for actuators in tension under full rated load use the following formula to modify the above tabulated values.

$$\text{Permissable Max. Side Load for Actual Offset} = \frac{\text{Max Side Load Rating Tabulated} * \text{Stated Offset}}{\text{Actual Offset}}$$

Note *The correct units must be used.*

Important Notes

1. *These figures are for actuators in tension only.*
2. *The figures given above are permissible side load ratings, however, we recommend that all side loads be carried by guides in your arrangement and not by the screw and nut.*
3. *Life of the lifting screw and nut will be adversely affected the more side load they see.*
4. *These figures are based on acceptable stresses in the lifting screw and not on lifting screw deflection.*
5. *For maximum side load ratings for actuators in compression consult Power Jacks Ltd.*
6. *For precise calculations for your application consult Power Jacks Ltd.*

1.5.1.7. Radial Loads on Actuator Worm Shaft

For applications where an actuator is belt/chain driven, a calculation must be made to determine the radial force (F_R) and compared to the allowable radial load exerted on the worm shaft, that must not exceed those tabulated below. The values below are maximum values for the actuators at rated load regardless of worm speed or load direction and the radial load applied midway along the key of the worm shaft. For all applications the sprocket, gear etc. Should be positioned as close as possible to the actuator housing in order to reduce bearing loads and shaft stresses, and to prolong life.

$$\text{Radial Force, } F_R = \frac{2000 \times T \times K}{D}$$

where F_R = Radial load (N).
T = torque applied to the actuators input shaft (Nm).
K = factor from table below.
D = p.c.d. in mm of gear, sprocket.

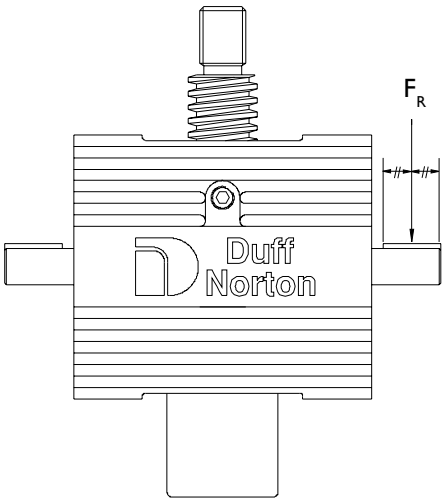

Transmission Element	Factor K
Chain sprocket	1
Gears (Spur or helical pinion)	1.25
V-Belt pulley	1.5
Flatbelt pulley	2.0

Sym-metric Machine Screw Actuators				
Actuator Rating (kN)	25	50	100	200
Radial Load (N)	440	1100	1200	1600

Metric Machine Screw & Ball Screw Actuators									
Actuator Rating (kN)	5	10	25	50	100	200	300	500	1000
Radial Load (N)	180	325	380	740	1000	1600	2170	2190	2220

Imperial Ball Screw Actuators												
Model Number		28631	2802	28021	28003	2805	28051	2810	28101	2820	2825	2860
Actuator Rating (Short Ton)		0.5	2	2	3	5	5	10	10	20	25	50
Lead (inches)		0.2	0.25	1	0.413	0.474	1	0.474	1	0.5	0.66	1
Radial Load	(lbf)	27	47	42	51	96	90	280	270	270	475	235
	(N)	120	210	185	225	425	400	1245	1200	1200	2110	1045

1.5.1.8. Actuator Accuracy

1.5.1.8.1. Axial Backlash Ratings

1.5.1.8.1.1. Sym-Metric, Metric and Imperial Machine Screw Actuators

Component	Normal Backlash
Lifting Screw and Nut	0.12 mm → 0.2 mm (0.005" → 0.008")
Load Bearings	0.00 mm → 0.03 mm (0.000" → 0.001")
Total	0.12 mm → 0.23 mm (0.005" → 0.009")

Note
1. *The lifting screw backlash will increase during operation due to wear of threads in the nut.*
2. *Axial play can be reduced by altering the load bearings preload to eliminate bearing play or by specifying an actuator with the Anti-Backlash Feature.*
3. *For exact backlash ratings for an individual unit consult Power Jacks.*

1.5.1.8.1.2. Anti-Backlash Option

This unit can be adjusted for screw thread and bearing clearances to a minimum of 0.025 mm (0.001"). Some clearances must be maintained to keep torque requirements within reason and to provide adequate space for a lubrication film to form.

1.5.1.8.1.3. Ball Screw Actuators

Actuator Type	Metric	Imperial
Component	Normal Backlash	Normal Backlash
Ball Track and Ball Nut	0.05 mm → 0.15 mm (0.002" → 0.006")	0.05 mm → 0.33 mm (0.002" → 0.013")
Load Bearings	0.00 mm → 0.03 mm (0.000" → 0.001")	0.05 mm → 0.075 mm (0.002" → 0.003")
Total	0.05 mm → 0.18 mm (0.002" → 0.007")	0.10 mm → 0.405 mm (0.004" → 0.017")

Note
1. *For exact backlash ratings for an individual unit consult Power Jacks.*
2. *Ball nuts can be supplied with zero backlash or with adjustable backlash via a special twin nut assembly (twin nut assembly for rotating screw units only). Consult Power Jacks for details.*
3. *Altering the load bearings preload to eliminate bearing play can reduce axial play.*
4. *There is no Anti-Backlash nut feature for the gear sets of these actuators.*

1.5.1.8.2. Pitch Deviation of Lifting Screw

Lifting Screw		Pitch Deviation
Machine Screw	Metric	0.05 mm → 0.25 mm per 300 mm
	Imperial	0.002" → 0.010" per foot
Ball Screw	Metric	0.025 mm → 0.050 mm per 300 mm (DIN Class 5,7)
	Imperial	± 0.009" per foot (± 0.229 mm per 300 mm)

Note
1. *Pitch deviation is cumulative and **NOT** detrimental to the operation of the actuator.*
2. *The Lifting screws are manufactured from material with a straightness tolerance of 0.2 mm per metre.*
3. *Pitch deviation is related to the cutting machines tolerance and the material used.*

1.5.1.8.3. Lateral Movement Ratings

1.5.1.8.3.1. Sym-metric Machine Screw Actuators

Raise (mm)	25 kN	50 kN	100 kN	200 kN
100	0.7	0.9	0.8	0.4
200	1.1	1.4	1.3	0.6
300	1.6	2.0	1.7	0.8
400	2.0	2.5	2.2	1.0
500	2.5	3.0	2.6	1.2
600	2.9	3.5	3.1	1.5
700	3.3	4.1	3.5	1.7
800	3.8	4.6	4.0	1.9
900	4.2	5.1	4.4	2.1
1000	4.7	5.6	4.9	2.3

1.5.1.8.3.2. Metric Machine Screw Actuators

Raise (mm)	5 kN	10 kN	25 kN	50 kN	100 kN	200 kN	300 kN	500 kN	1000 kN
100	0.7	0.6	0.8	1.0	1.0	0.4	0.4	0.7	0.7
200	1.3	1.1	1.4	1.7	1.7	0.7	0.6	1.0	1.0
300	1.9	1.5	1.9	2.3	2.3	0.9	0.8	1.3	1.3
400	2.5	2.0	2.5	2.9	2.9	1.2	1.0	1.7	1.6
500	3.1	2.4	3.1	3.6	3.6	1.4	1.2	2.0	1.9
600	3.7	2.8	3.6	4.2	4.2	1.6	1.4	2.3	2.2
700	4.3	3.3	4.2	4.8	4.8	1.9	1.6	2.6	2.4
800	4.8	3.7	4.8	5.5	5.5	2.1	1.8	2.9	2.7
900	5.4	4.2	5.3	6.1	6.1	2.4	1.9	3.2	3.0
1000	6.0	4.6	5.9	6.7	6.7	2.6	2.1	3.6	3.3

1.5.1.8.3.3. Imperial Machine Screw Actuators (1800 & 9000 Series)

Raise (inch)	2555	2625	2501	1802	9002	1805	1810	1815	1820	1825	9035	1850	9075	1899	18150	2250
3	.040	.050	.020	.020	.020	.030	.025	.030	.025	.035	.040	.060	.050	.050	.050	.090
6	.085	.075	.030	.035	.035	.050	.040	.045	.040	.060	.050	.090	.060	.060	.060	.100
9	.090	.105	.040	.055	.055	.070	.055	.065	.050	.085	.060	.120	.070	.070	.070	.110
12	.115	.135	.050	.070	.070	.090	.070	.080	.070	.105	.070	.150	.080	.080	.080	.120
15	.140	.165	.060	.090	.090	.110	.085	.100	.080	.130	.080	.180	.090	.090	.090	.130
18	.165	.195	.070	.100	.100	.130	.100	.120	.095	.155	.090	.215	.100	.100	.100	.140
21	.190	.225	.080	.120	.120	.150	.115	.133	.105	.175	.100	.245	.110	.110	.110	.150
24	.215	.225	.090	.135	.135	.170	.135	.150	.125	.200	.110	.275	.120	.120	.120	.160

Notes

1. *Values quoted above are the maximum expected lateral movement for the given raise and actuator model.*
2. *Does not allow for possible deflection due to side loads.*
3. *Lateral movements are for information only. For best results we recommend guides where possible.*
4. *Lateral movements will be reduced if the actuator is fitted with secondary guides (standard option for Sym-metric and Metric actuators).*
5. *The above movements apply to machine screw actuators only and not ball screw actuators. Permitting lateral movement on the ball screw actuators under load will exert side thrust on the ball screw and ball nut, and will be detrimental to the ball screw and nut life. Ball screw applications should be guided to ensure a minimum of lateral movement.*
6. *Where lateral movement is critical consult Power Jacks for exact values for the application.*

1.5.2. Actuators Product Operation

1.5.2.1. Actuators

1.5.2.1.1. Actuator Mechanical Performance

1.5.2.1.1.1. Lifting Torque Required

The input torque for a single actuator depends on the load, the worm gear ratio, type of screw (machine cut or ball screw) and the pitch of the lifting screw. Torque values are listed in the individual product specification charts based on capacity loads. For loads from 25% to 100% of actuator model capacity, torque requirements are approximately proportional to the load.

1.5.2.1.1.2. Actuator Operating Input Speed

The input power to these actuators should not exceed the power rating shown in the specifications table. Maximum rpm should not exceed 1800 (sym-metric actuators can go up to 3000 rpm). We cannot accept responsibility for the overheating and rapid wear that may occur should these limits be exceeded. Power increases in direct proportion to the speed, and the motor size will be out of proportion to the actuator model design rating should the speed become excessively high. When selecting the maximum permissible speed for an actuating arrangement, always check to see that the power rating of the actuator model is not exceeded.

1.5.2.1.1.3. Actuator Efficiency

Actuator model efficiencies are listed in the individual product specification charts.

1.5.2.1.1.4. Worm Gear Actuator Life

The life expectancy of a machine screw actuator screw, nut and worm gear set varies considerably due to extent of lubrication, abrasive or chemical action, overloading, excessive heat, improper maintenance, etc. For life calculations consult Power Jacks Ltd.

1.5.2.1.1.5. Torque of a Rotating Screw Actuator and a Standard Unit

The input torque, as well as the efficiency and side load ratings, are the same for both translating screw and rotating screw actuators.

1.5.2.1.1.6. Shock Loads on an Actuator

Shock loads should be eliminated or reduced to a minimum, if they cannot be avoided, the actuator model selected should be rated at twice the required static load. For severe shock load applications, using the Sym-metric, Metric and Imperial actuators, the load bearings should be replaced with heat-treated steel thrust rings which is an option available from Power Jacks. Note this will increase the input torque by approximately 100 percent.

1.5.2.1.1.7. Backlash in an Actuator Unit

Machine screw actuators, machine screw actuators with anti-backlash and ball screw actuators must be considered separately, as the normal backlash will vary due to different constructions.

1.5.2.1.1.7.1. Machine Screw Actuators

Machine Screw Actuators have backlash due not only to normal manufacturing tolerances, but to the fact that we must have some clearances to prevent binding and galling when the actuator unit is under load (refer 1.5.1.8.). Usually, the backlash is not a problem unless the load on the actuator unit changes between compression and tension. If a problem does exist, then a unit with the anti-backlash feature should be considered.

1.5.2.1.1.7.2. Anti-Backlash Actuator Feature

When the screw (1) is under a compression load, the bottom of its thread surfaces are supported by the top thread surfaces of the worm gear (2) at point (A). The anti-backlash nut (3), being pinned to the worm gear and floating on these pins and being adjusted downward by the shell cap, forces its bottom thread surfaces against the upper thread surfaces of the lifting screw at point (B). Thus, backlash between worm gear threads is reduced to a regulated minimum (refer 1.5.1.8.).

When wear occurs in the worm gear threads and on the load carrying surfaces of the lifting screw thread, the load carrying thickness of the worm gear thread will be reduced. This wear will create a gap at point (B) and provide backlash equal to the wear on the threads.

Under compression load, the lifting screw will no longer be in contact with the lower thread surface of the anti-backlash nut. Under this condition, backlash will be present when a tension load is applied. The anti-backlash feature can be maintained simply by adjusting the shell cap until the desired amount of backlash is achieved.

To avoid binding and excessive wear do not adjust lifting screw backlash to less than 0.013mm (0.0005").

This will reduce the calculated separation (C) between the anti-backlash nut and worm gear and will reduce the back lash between the worm gear threads and the lifting screw to the desired minimum value.

When separation (C) has been reduced to zero, wear has taken place. Replace the worm gear (2) at this point. This feature acts as a built in safety device which can be used to provide wear indication for critical applications.

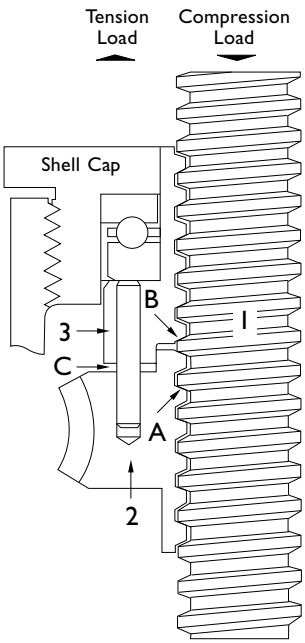

1.5.2.1.1.7.3. Ball Screw Actuators

Ball Screw Actuators do not have an anti-backlash option similar to the machine screw actuators. Instead for zero or reduced axial play ballscrew actuators can be ordered with a pre-loaded ball nut (refer 13.1.1.2.).

1.5.2.1.1.8. Actuator Self-Locking

The following actuator models are considered not to be self-locking; all Metric and Imperial ball screw actuators, the 2555 (1/4 ton), the 2625 (1/2 ton), the 2501 (1-ton), in some cases the 1802 & 9002 (2 ton) units, the 1805 (5 ton) unit, the 1810 (10 ton) unit and the 1815 (15 ton) unit. The 24:1 and 25:1 ratios are self-locking in most cases. All actuators with double start lifting screws are considered not to be self-locking. Units considered not self-locking will require a brake or other holding device (refer 1.1.3.2.7.).
If vibration conditions exist, refer to section 1.5.2.1.4.5. For detailed advice and analysis consult Power Jacks.

1.5.2.1.2. Lifting Screw

1.5.2.1.2.1. Lifting Screw Operation

When an actuator unit is operated, the rotation of the worm shaft causes the worm gear to rotate. The worm gear is threaded to accommodate the lifting screw thread; as the worm gear turns, the friction forces on the screw thread act to turn the screw also. The greater the load on the actuator unit, the greater the tendency of the screw to turn. It is obvious that if the screw turns with the nut (worm gear), it will not raise the load. In those cases where a single unit is used, and where the load cannot be restrained from turning, it is necessary to key the lifting screw. Lifting screw key torques (refer 1.5.1.5.) must be checked as excessively heavy unguided loads could break the key.

1.5.2.1.2.2. Keyed Lifting Screw - To Prevent Rotation

Available for all actuators, except for the ball screw. Note the keyway in the screw causes greater than normal wear on the internal threads of the worm gear. The ball screw actuators cannot be keyed, as the keyway would interrupt the ball track, permitting loss of the recirculating balls.

We recommend the following methods for preventing rotation. For multiple actuator model applications, bolt the lifting screw top plates to the member being lifted. For single actuator unit applications, bolt the lifting screw top plate to the load and ensure the load is guided to prevent rotation. A guided load is recommended as a heavy unguided load could cause key failure. Note as a special design option a square anti-rotation tube can be fitted to ball screw actuators to prevent rotation (refer 1.3.1.10.). For further details consult Power Jacks Ltd.

1.5.2.1.2.3. Keyed Lifting Screw For An Inverted Actuator

For Metric and Imperial actuators the key is mounted in the shell cap, making it necessary to omit the bottom pipe as a standard item. If a dust guard is required, a special adaptor must be attached to permit mounting. Sym-metric actuators can have the key mounted either side of the gear with a bottom pipe available for both options, as standard.

1.5.2.1.2.4. Lifting Screw Column Strength

The column strength of a screw is determined by the relationship between the length of the screw and its diameter. Column strength nomographs are included in this book (refer 1.5.1.1.).

1.5.2.1.2.5. Actuator Side Loads

Actuator units are designed primarily to raise and lower loads and any side loads should be avoided. These units will withstand some side loads, depending on diameter of the screw and the extended length of the screw. Where side loads are present, the loads should be guided and the guides, rather than the actuator units, should take the side loads - particularly when long raises are involved. Even a small side load can exert great force on the housings and bearings and increase the operating torque and reduce the life expectancy. "Side Load Rating Charts" are included in this book (refer 1.5.1.6.)

1.5.2.1.2.6. Maximum Practical Raise or Working Stroke

Generally, standard raises are up to 300mm on 5kN and 500mm on 10 kN on metric screw actuators 12 inches on $^1/_4$ and $^1/_2$ ton models and 18 inch on the 2501 (one ton) imperial actuators. Maximum raises available for the larger diameter screws are limited only by the available length of bar stock from suppliers. Practical length will be affected by whether the screw is to be subjected to compression or tension loads. Depending on diameter the length can be limited due to deformation of material in the machining process or column strength of the screw when subjected to compression loads. Long raise applications should be checked with Power Jacks for the following:

a) Side loads on extended screw (1.5.1.6.)
b) Column strength of screw (1.5.1.1.)
c) Thermal rating of screw and nut (1.5.2.1.3.4.)

We suggest guides be used on all applications. The longer the raise, the more important this becomes.

1.5.2.1.3. Actuator Duty

1.5.2.1.3.1. Allowable Duty Cycle of a Worm Gear Actuator

Because of the efficiency of conventional metric and imperial worm gear actuators, the duty cycle is intermittent at rated load. At reduced loading, the duty cycle may be increased. The Sym-metric actuators have higher thermal efficiencies due to their design allowing generally 50% higher duty cycles than conventional style actuators. For detailed analysis consult Power Jacks.

1.5.2.1.3.2. Worm Gear Actuator Suitability for High Temperature Operation

The actuator is normally suitable for operation at ambient temperatures of up to 90°C. Operations above 90°C will require special lubricants. For temperatures above 90°C, the life of even special lubricants is limited. Therefore consult Power Jacks on your application.

For temperatures above 90°C, advise Power Jacks of full particulars of the duration of such temperatures. In some cases, it may be necessary to furnish an unlubricated unit, then the customer will supply the lubricant of his own choice. We suggest that a lubricant manufacturer be consulted for type of grease and lubrication schedule. As a general rule, the actuator unit should be shielded to keep ambient temperatures to 90°C or less.

Seals for temperatures above 120°C are very expensive. Instead, we should substitute bronze bushings for seals in these cases. If bellows boots are used, special materials will be required for temperatures above 90°C.

1.5.2.1.3.3. Actuator Suitability for Low Temperature Operation

With the standard lubricant and materials of construction, the actuator is suitable for use at sustained temperatures of -20°C. Below -20°C, low temperature lubricant should be used. Also, at temperatures below -20°C, if there is any possibility of shock loading, special materials may be required due to notch sensitivity of the standard materials at lower temperatures. Power Jacks application engineers must be consulted in these instances for a recommendation.

Actuators with standard material of construction and lubrication may be safely stored at temperatures as low as -55°C.

1.5.2.1.3.4. Thermal/Heat Build-Up in an Actuator Unit

The duty cycle, the length of the screw, the magnitude of the load, and the efficiency of the actuator unit all have a direct influence on the amount of heat generated within the actuator model. Since most of the power input is used to overcome friction, a large amount of heat is generated in the worm gear set in both ball screw and machine screw actuator models, and in the lifting screw of machine screw actuator units. Long lifts can cause serious overheating. Sym-metric actuators have an oil lubricated cubic gearbox housing specifically designed to dissipate heat more efficiently with increased surface area and mass, allowing increased duty capabilities.

1.5.2.1.3.5. Continuous Duty Actuators

Recommendation should be obtained from Power Jacks on this type of application and a completed application analysis form submitted. In general, semi-continuous operation can be permitted where load is light as compared to actuator model rated capacity. Units so used should be lubricated frequently and protected against dust and dirt. The Sym-metric and 7500 Series, oil-lubricated, high duty cycle actuators, are designed for maximum duty cycles. Special purpose actuators fitted with ball screws may also suit applications, consult Power Jacks.

1.5.2.1.4. Actuator Applications

1.5.2.1.4.1. Bellows Boots for an Inverted Screw Actuator

Metric and Imperial inverted screw actuators with bellows boots must incorporate an allowance in the length of the lifting screw for both the closed height of the boot and structure thickness. Since we can make no provision for attaching a boot on the underside of your structure, we suggest that a circular plate similar to the lifting screw top plate be welded or bolted to the bottom of your structure supporting the actuator unit, thereby making it possible to use a standard bellows boot. (refer 1.2.1.8., 1.2.2.8., 1.2.3.7. and 1.3.1.3. and 1.3.2.8.).

Sym-metric actuators allow mounting from two sides instead of one and allow mounting on the same side as the bellows boot with only an access hole required in the structure for the lifting screw and bellows boot.

1.5.2.1.4.2. Actuator used to Pivot a Load

The actuator can be furnished with a clevis at both ends. The bottom clevis is welded to the bottom end of an extra strong pipe which is threaded into the base of the actuator and welded. This bottom pipe still performs its primary function of encasing the lifting screw in its retracted portion. The design of the structure in which this type unit is to be used must be so constructed that the actuator unit can pivot at both ends. Use only direct compression or tension loads, thereby eliminating side load conditions. See the double clevis model illustrations on the dimensional drawings (refer 1.2.2.10., 1.2.3.5. 1.3.1.5. and 1.3.2.7.).

1.5.2.1.4.3. Actuators used within Rigid Structures or Presses

We recommend that the actuator selected has a greater capacity than the rated capacity of the press or of the load capacity of the structure. We also recommend that a torque clutch or similar device be used to prevent overloading of the actuator unit. Unless these precautions are taken, it is possible to overload the actuator unit without realising it.

1.5.2.1.4.4. Actuator Drift after Motor Switch Off

The actuator will drift after the motor drive is switched off unless a brake of sufficient capacity is used to prevent it. The amount of drift will depend upon the load on the actuator unit and the interia of the rotor in the motor. Due to different construction, the ball screw actuator unit must be considered separately; refer 1.1.3.2.7. Machine screw actuators require approximately one-half as much torque to lower the load as they do to raise the load.

For machine screw actuators with no load, the amount of drift will depend upon the size and speed of the motor. For example, a 1500 RPM motor directly connected to an actuator unit without a load will give on average 35mm → 60mm drift; a 1000 RPM gear motor will give about 1/2 as much drift. Note that the drift varies as the square of the velocity (RPM). The drift of the actuator unit screw can be controlled by using a magnetic brake on the motor.

1.5.2.1.4.5. Actuator Units where Vibration is Present

The actuators will operate in areas with vibration, however the vibration may cause the lifting screw to creep or inch down under load. For applications involving slight vibration, select the higher of the worm gear ratios. Should considerable vibration be present, use a drive motor equipped with a magnetic brake which will prevent the actuator from self-lowering.

1.5.2.1.4.6. Stop Discs, Stop Pins or Stop Nuts Used on Actuator Units

To prevent over travel of the lifting screw a stop disc, pins or nut can be fitted to an actuator unit that is hand operated. For motor driven units it is possible for the full capacity of the actuator unit or even a greater force (depending on the power of the motor) to be applied against the stop, thereby jamming so tightly it must be disassembled in order to free it. It is recommended that external stops are fitted where possible, however they must only be used as a last resort (Note - limit switches are one possible solution to constrain actuator movement safely - consult Power Jacks for system advice). Under ideal conditions where a slip clutch or torque limiting device is used, a stop pin or stop nut may be used - but Power Jacks should be consulted. The stop disc used on the bottom of the lifting screw prevents our ball screw from running out of the ball nut during shipping and handling, thereby preventing loss of the recirculating balls.

1.5.2.2. Actuator Systems

1.5.2.2.1. Multiple Actuator Arrangements

Perhaps the greatest single advantage of Power Jacks actuators is that they can be linked together mechanically, to lift and lower in unison. Typical arrangements involving the actuator units, bevel gear boxes, motors, reducers, shafting and couplings are shown in section 1.1.3.2.8.

1.5.2.2.2. Number of Actuators Connected in Series

This will be limited by input torque requirements on the first worm shaft in the line. The torque on the worm shaft of the first actuator unit should not exceed 300% of its rated full load torque on the machine screw actuators (this does not include the 1820 unit).

1.5.2.2.3. Multiple Actuator Arrangement

In addition to the efficiencies of the actuator units and the mitre gearboxes, the efficiency of the actuator multiple-unit arrangement must be taken into consideration. The arrangement efficiency allows for misalignment due to slight deformation of the structure under load, for the losses in couplings and bearings, and for a normal amount of misalignment in positioning the actuators and gear boxes. For efficiency values refer 1.1.3.2.8.

1.5.2.2.4. Multiple Actuator Unit Arrangement with a Visual Position Indicator for Lifting Screw Position at any Point

A visual position indicator for an actuator system can be provided in several ways, for example:

1. Actuator system with encoder and counter (refer 8.3. and 8.4.)
2. Actuator system with rotary limit switch and position transducer (refer 8.1.2.)

However, it is suggested you consult Power Jacks for recommendations based on your particular application.

1.5.3. Installation and Maintenance Tips

The following installation and maintenance tips are for the Sym-metric, Metric and Imperial machine screw and ball screw actuator models.

General care should be taken to ensure that equipment is sufficient to handle the load.

1. The structure on which the actuator unit is mounted should have ample strength to carry the maximum load, and be rigid enough to prevent undue deflection or distortion of the actuator unit supporting members.
2. It is essential that the actuator unit be carefully aligned during installation so that the lifting screws are vertically true and the connecting shafts are exactly in line with the worm shafts. After the actuator unit, shafting, and gear boxes are coupled together, it should be possible to turn the main drive shaft by hand. If there are no signs of binding or misalignment, the actuating system is then ready for normal operation.
3. The actuator unit should have a greater raise than is needed in the actuator installation. If it is necessary to operate the actuator at the extreme limits of travel, it should be done with caution.

   CAUTION: **Do not allow screw travel below catalogue closed height of the actuator unit or serious damage to internal mechanism may result. Refer to table specifications for closed height of respective units.**
4. The input power should not exceed the power rating shown in the specification table. Maximum RPM should not exceed 1800.
5. The lifting screw should not be permitted to accumulate dust and grit on the threads. If possible, lifting screws should be returned to closed position when not in use.
6. The ball screws in the ball screw actuator units should be checked periodically for excessive backlash and spalling of raceways. A periodic check of backlash of the lifting screw thread is recommended to check wear of the worm gear internal threads on the machine screw actuator models. Backlash in excess of 50% of the thread thickness indicates the need to replace the worm gear. (refer 1.5.1.7. and 1.5.2.1.1.7.).
7. Unless otherwise specified, actuator units and gear boxes are shipped packed with grease (refer point 8 for oil lubricated standard products) which should be sufficient for one month of normal operation. For normal operation, the actuator units and gear boxes should be lubricated about once a month, using one of the following extreme pressure greases or their equivalent:

Shell	Alvania WR2
BP	Energrease LC2
Castrol	Spheerol L-EP2
Mobil	Mobilux EP2

   For severe conditions, the actuator units should be lubricated more frequently, using one of the above greases (daily to weekly depending on conditions). If duty is heavy, an automatic lubrication system is strongly recommended. If ambient temperatures exceed 90°C (194°F) consult Power Jacks.
8. Unless otherwise specified, all Sym-metric Actuators have oil filled gear boxes which should be sufficient for normal operation. Under normal operation, the actuator units should have oil levels checked regularly, using one of the following premium gear oils or their equivalent:

	Sym-metric Actuator
BP	Energol GR-XP150
Shell	OMALA Oil 150
Castrol	Alpha SP150
Mobil	Gear Oil 629
9. On ball screw actuator model applications, periodically lubricate the exposed ball screw grooves with a cloth dampened with a good grade 10W30 oil for most applications. An instrument grade oil should be used in dirty and heavy duty environments, and bearing grease for environments at extremely high temperatures. Extreme temperature and other environmental conditions should be referred to Power Jacks for recommended lubricating procedures.

   CAUTION: **Where ball screws are not protected from airborne dirt, dust, etc., bellows boots should be used. Inspect frequently at regular intervals to be certain a lubricating film is present. Ball screws should never be run dry.**
10. Due to the high efficiency of the ball screw actuator design, a brake must be used in conjunction with motor selected to position the actuator unit (refer 1.1.3.2.7. and 1.5.2.1.1.8.)

POWER JACKS
manufacturers of precision screw jacks, actuators and gearboxes Group

Section 2.1. - EMA Linear Actuators

EMA Series Actuators
AC and DC 2.5 kN to 10kN

Power Jacks EMA Linear Actuators

Machine Screw and Ball Screw
Low load, medium duty, high speed
Dynamic load ratings up to 10 kN
Linear speeds up to 5500 mm/min
3 Phase AC, 1 Phase AC and DC types

Section 2.2. - Rolaram Linear Actuators

Rolaram® Linear Actuators Roller Screw
4 kN to 400 kN

Power Jacks Rolaram Linear Actuators with Roller Screw

High load, high duty, high speed, very high accuracy
Dynamic load ratings up to 400 kN
Linear speeds up to 7000 mm/min
3 Phase AC, 1 Phase AC and DC types

2. linear **actuators** (electro mechanical)

Section 2.2. - Rolaram Linear Actuators

Rolaram® Linear Actuators Ball Screw
4 kN to 65k N

Power Jacks Rolaram Linear Actuators with Ball Screw

Medium load, high duty, high speed, high accuracy
Dynamic load ratings up to 65 kN
Linear speeds up to 7000 mm/min
3 Phase AC, 1 Phase AC and DC types

Section 2.1. and 2.2. - Special Linear Actuators

Special Custom Designed Linear Actuators

Power Jacks Special Linear Actuators

Special designs for EMA or Rolaram Actuators
Machine Screw, Ball Screw or Roller Screw
Dynamic load ratings up to 1000 kN
Linear speeds up to 10000 mm/min
3 Phase AC, 1 Phase AC and DC types

Contents

2.1. EMA Linear Actuators

2.1.1. Overview of EMA Linear Actuator Range

2.1.1.1. What is EMA Linear Actuator?

EMA is an abbreviation for Electro Mechanical Actuator, which consists of either a trapezoidal or ball lead screw, driven by an electric motor through spiroid gearing. The screw converts the rotary motion into linear movement. As the screw rotates, the nut extends and retracts the ram, which is attached to the load.

2.1.1.2. The EMA Linear Actuator Range

There are 3 standard EMA models, all available in a right-angle drive configuration.

- Intermittent model, incorporating a trapezoidal screw.
- Continuous model, incorporating a ball screw
- High Speed Continuous model, incorporating a ball screw.

Where the standard range does not meet the application specification, special actuators can be designed to meet customers' specific requirements.

2.1.1.3. Dynamic Load Capacity and Speed

The dynamic load capacity range is up to 10 kN. A defined range of linear speeds from 135 mm/minute to 5510 mm/minute is available. The speed range is achieved by using a combination of gearbox ratios, screw leads and standard motor speeds.

2.1.1.4. Drives

As standard, the units are available with 240v/415v AC or 24v DC motors, with or without a brake. The type of motors required is dependent on the customer's application. The motors are mounted to the actuator on a 63C Face Flange Mounting.

2.1.1.5 Stroke

Each model can be provided with a stroke length up to the maximum, in compression, shown in the Technical Charts. The stroke is defined by the customer. For a tensile load, greater maximum strokes can be accommodated, depending on the linear speed. Where the stroke required exceeds the maximum shown, or there is a high static load, please contact our Technical Sales Department.

2.1.1.6. Standard Features

- Choice of AC or DC motor drives.
- Choice of end fittings: clevis, fork clevis,top plate or screwed end.
- Trunnion Mounting.
- Limit Switches.

2.1.1.7. Emergency Overload Clutch

The emergency overload clutch is a device, which is mounted on the actuator ram, which will slip when the torque to drive the load exceeds the limit set. If the load is axially locked, or if a torque greater than the clutch setting is required to move the load, the clutch will disengage the load from the ram and prevent the motor from overloading the actuator components. Please note that the clutch is an emergency device and should not be used for reversing the actuator direction.

2.1.1.8. Limit Switches

Limit switches are fitted to provide end of stroke or ultimate over travel safety. They are mounted on the outer tube of the actuator and are tripped by a collar on the ram. They are set at a fixed length defined by the customer (see dimensional page for details). Adjustable Limit Switches can be provided on request, consult Power Jacks.

2.1.1.9. Guiding the Load

Side loads on the actuator ram should be avoided by ensuring that the load is guided. The load guide mechanism should resist the torque developed at the ram by the screw mechanism. A guided ram can be supplied on request, which utilises a keyway in the inner ram, eliminates the need for torsional restraint and therefore allows flexibility in the choice of end fitting.

2.1.1.10. Construction

All units are constructed and finished to suit industrial operating conditions. The actuator gearbox and outer tube are either aluminium or plated for protection and the ram is zinc plated steel. The actuator is sealed at the ram.

2.1.2. EMA Typical Applications

2.1.2.1. Tilt/Pivot

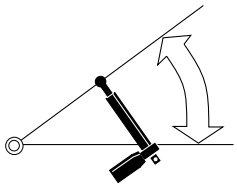

EMA Linear Actuators can be used to tilt objects, fixed at one end, up to 180° from their starting positions. The extension and retraction of the actuator causes the object to pivot about its stationary end.

2.1.2.2. Lift/Lower

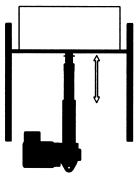

EMA Linear actuators can handle any lifting and lowering application up to 10kN. As the translating tube of the actuator extends and retracts, the object that the actuator is attached to is raised and lowered at a constant speed.

2.1.2.3. Position

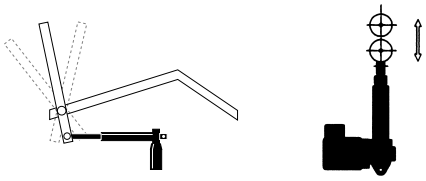

When an application requires periodic adjustment to the position of an object or objects, EMA linear actuators provide the solution. The motion of the actuator allows the operator to position an object by simply pushing a button.

2.1.2.4. Roll/Slide

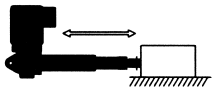

When it is necessary to roll or slide an object or a mechanical assembly into position, an EMA linear actuator is the answer. The movement of the actuator causes the clamping, rolling or sliding of the desired object.

2.1.2.5. Open/Close

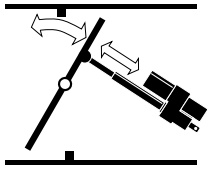

An EMA linear actuator mounted on a door, gate or valve allows opening and closing operations on either a timed, or on-demand basis. As the actuator retracts the gate is opened at a steady rate; the extension of the actuator returns the gate to a closed position.

2.1.2.6. Tension

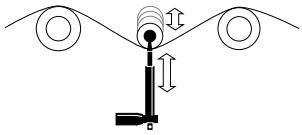

EMA linear actuators offer a perfect solution for applications in which tension on a conveyor or webb must be maintained and adjusted. An actuator mounted on a frame or roller extends and retracts to control the tension in the system.

2.1.2.7. Lock/Unlock

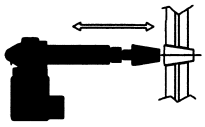

For moving a locking device such as a pin in and out of retaining slot, EMA linear actuators provides the perfect solution. The motion of the actuator allows the operator to lock and unlock the device smoothly and safely by the touch of a button. Extend and retract limit switches on the actuator can be used as lock/unlock signals for a machines control system.

2.1.3. Working Applications for EMA Actuators

Application Actuation of the rear door of the British Army armoured personnel vehicle. The door weights 240 kg, but at compound angles of 30°, can weigh up to 2.6 tonnes.

Product One Continuous, 5 kN, 24v DC actuator, which is suppressed to avoid radio interference. The actuator can be submersed in water and has to be able to operate immediately whilst the vehicle is out of the water.

Application To lower the cradle and raise the feed hopper on a granulator. The granulator is used in the plastics, rubber and security disintegration industries.

Product Two intermittent, 5 kN, 240v AC actuators on each granulator. One at 280 mm stroke lowers the cradle and the other at 520 mm stroke raises the hopper.

Application To displace via tilt and slew motions, the slave arm relative to the master arm, on manipulators for handling radioactive material. The actuators also act as load bearing struts, carrying the full reaction loads.

Product Two Continuous, 2.5 kN and 5 kN. DC actuators on each manipulator.

Application Conveyor belt tracking, mainly for the food industry. The actuator moves when adjustment is required, to centralize the conveyor belt, ensuring longer life of the belt and reducing production downtime.

Product One Continuous, 5 kN, 240v AC actuator is fitted onto each tracker unit.

Application Pay off and take up cable/wire machine. The actuators operate continuously, providing adjustment to ensure even winding onto the drums.

Product Two Intermittent, 2.5 kN, 415v AC actuators are fitted onto each machine.

2.1.4. Product Code for EMA Actuators

The product code for Electro Mechanical Actuators (EMAs) is of the following form:

(1)	(2)	(3)	(4)	(5)	(6)	(7)	(8)	(9)	(10)	(11)
□	□□	□□□□	□	□	□□□	□	□□□□	□	□	□

(1) Actuator Model
- I - Intermittent
- C - Continuous
- H - High Speed Continuous

(2) Dynamic Load Capacity
- 02 - 250 kg
- 05 - 500 kg
- 10 - 1000 kg

(3) Linear Speed
This is shown as a 4 figure code refer to Technical Charts 2.1.5.

(4) Mountings
- 1 - Version 1
- 2 - Version 2
- 3 - Version 3
- 4 - Version 4

The position of mounting versions 3 and 4 is variable and should be specified by the customer at the time of ordering.

(5) Brake
- B - Brake Motor
- N - Non Brake Motor

(6) Motor Type
- 240 - 240v AC, 1 Phase
- 415 - 415v AC, 3 Phase
- 024 - 24v DC

(7) End Fitting
- C - Clevis End
- F - Fork Clevis
- T - Top Plate
- S - Screwed End

(8) Stroke
A 4 figure code to represent the required stroke in mm.

(9) Emergency Overload Clutch
- 1 - Clutch
- 2 - No Clutch

(10) Limit Switches
- L - Limit Switches
- N - No Limit Switches

(11) Special Feature(s)
- N - No Special Feature
- S - Customer to advise feature(s)

Example Part Number

(1)	(2)	(3)	(4)	(5)	(6)	(7)	(8)	(9)	(10)	(11)
1	05	0685	1	B	415	C	0300	1	L	N

(1) Intermittent Actuator
(2) 500 kg Capacity
(3) Linear Speed of 685 mm/minute.
(4) Mounting Version 1
(5) Brake Motor
(6) 415v AC Motor, 3 Phase
(7) Clevis End Fitting
(8) 300 mm Stroke
(9) With Clutch
(10) With Limit Switches
(11) Without Special Features

Notes: *1. Where a special feature is required, the customer should please provide a description and/or drawing of the special feature.*

2.1.5. EMA Linear Actuator Performance Data

The following performance charts give the available dynamic loads, linear speeds, motor details and maximum compression strokes for each model of actuator. The charts refer to an actuator fitted with a non-brake 3-phase or 1-phase AC motor. However 24VDC units can be sized similarly and exact details can be provided on request. For other operating requirements or motor types, which are not satisfied by these tables please, contact Power Jacks.

2.1.5.1. Model I - Intermittent Duty

Duty rating guide: less than 10 starts per day, 10 hours running per day.

Dynamic Load Capacity (kN)	Linear Speed (mm/min)	Motor (kW) Frame Size	Motor Frame Size	Motor Poles	Max Stroke (mm) (in compression)
10	135	0.18	D71	6	750
5	200	0.18	D63	4	750
5	270	0.18	D71	6	750
5	410	0.18	D63	2	750
2.5	820	0.18	D63	2	750

2.1.5.2. Model C - Continuous Duty

Duty rating guide: more than 10 starts/day

Dynamic Load Capacity (kN)	Linear Speed (mm/min)	Motor (kW) Frame Size	Motor Frame Size	Motor Poles	Max Stroke (mm) (in compression)
10	225	0.18	D71	6	900
10	335	0.18	D63	4	900
10	685	0.18	D63	2	900
5	1370	0.18	D63	2	1250
2.5	2740	0.18	D63	2	1500

2.1.5.3. Model H - High Speed Continuous Duty

Duty rating guide: more than 10 starts/day, high speed.

Dynamic Load Capacity (kN)	Linear Speed (mm/min)	Motor (kW) Frame Size	Motor Frame Size	Motor Poles	Max Stroke (mm) (in compression)
10	900	0.25	D71	6	900
10	1375	0.37	D71	2	900
10	2755	0.55	D71	2	900
5	1805	0.18	D71	6	1250
5	5510	0.37	D71	2	1250

2.1.5.4. Motor Types

As standard, the units are available with 240V / 415VAC 3phase or 240VAC 1 phase or 24VDC motors, with or without a brake. The type of motors required is dependent on the customer's application. The motors are mounted to the actuator on an IEC 63C Face Flange Mounting.

Item	Motor Type		
	3 Phase	1 Phase	24VDC
Voltage	220→240/380→415 VAC	220→240 VAC	24 VDC
Motor Design	Induction	Capacitor Start/Induction Run or Capacitor Start/Capacitor Run	Permanent Magnet
Frame Type	IEC, 63C Face	IEC, 63C Face	IEC, 63C Face
Enclosure (std)	IP54	IP54	IP54
Options			
Brake	3ph AC, 1ph AC or DC	1ph AC or DC	DC
Enclosure	IP55, 56, 65	IP55	IP55
Encoder	Available	Available	Available
Forced Ventilation	Available	-	Available
Other	Inverter Rated	-	12, 48 VDC

2.1.5.5. EMA Actuator Weight

Model	Basic Weight (kg)	Weight (kg) per 100 mm Stroke
I	9	0.69
C	10	1.3
H	12	1.3

2.1.5.6. Operating Environment

The standard operating environment is given below for hostile or hazardous operating environments please consult Power Jacks.

2.1.5.6.1. Enclosure

Overall actuator enclosure is IP54 as standard. IP55, 56 and 65 are available on request consult Power Jacks for advise.

2.1.5.6.2. Normal Operating Temperature

Normal operating temperatures are from -10°C to +50°C.

Please contact Power Jacks to discuss hostile or hazardous operating environments.

2.1.6. EMA Linear Actuator Dimensions

2.1.6.1. EMA Linear Actuator Arrangements

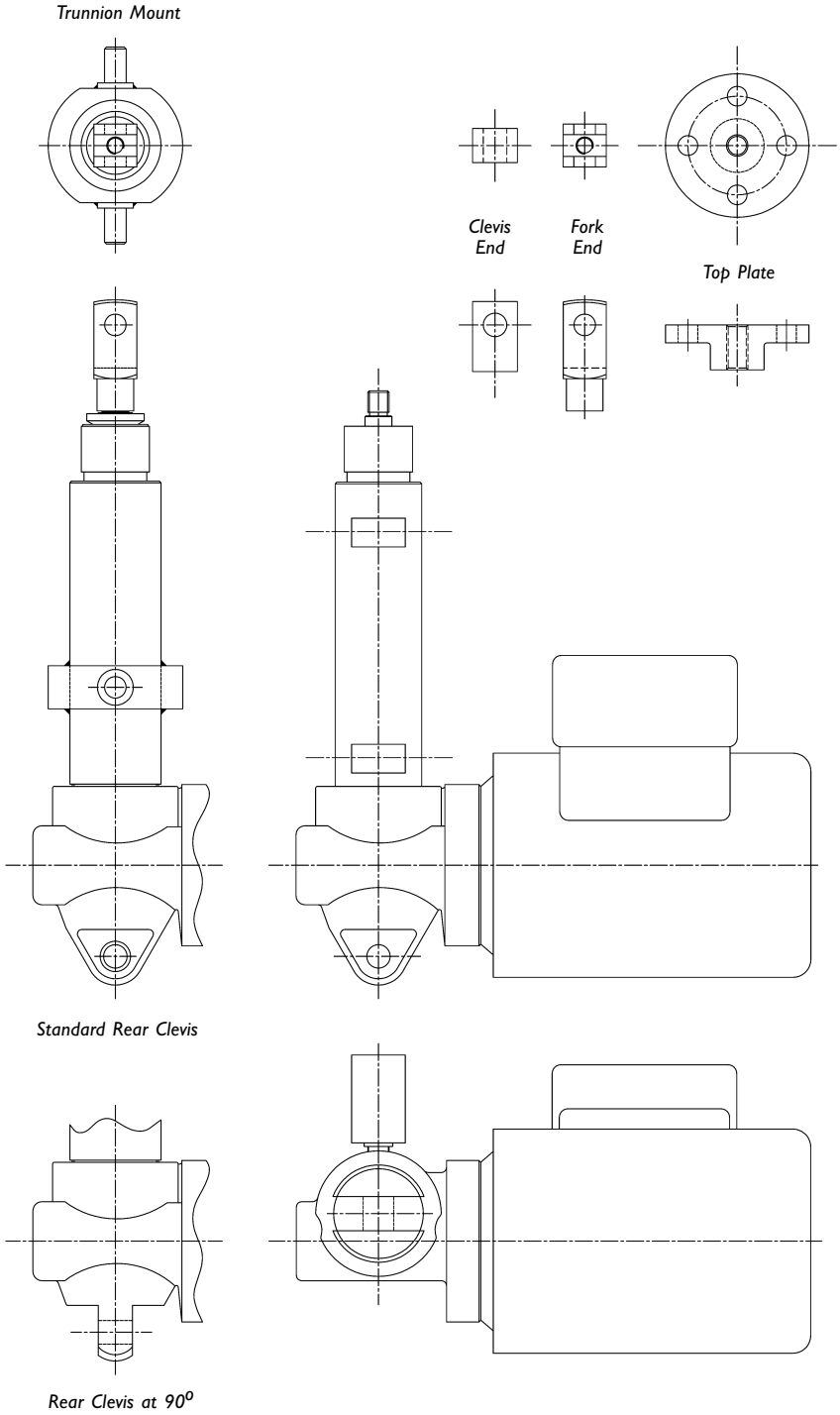

2.1.6.2. Model I - Intermittent Duty

2.1.6.2.1. Model I - WITH Emergency Overload CLUTCH

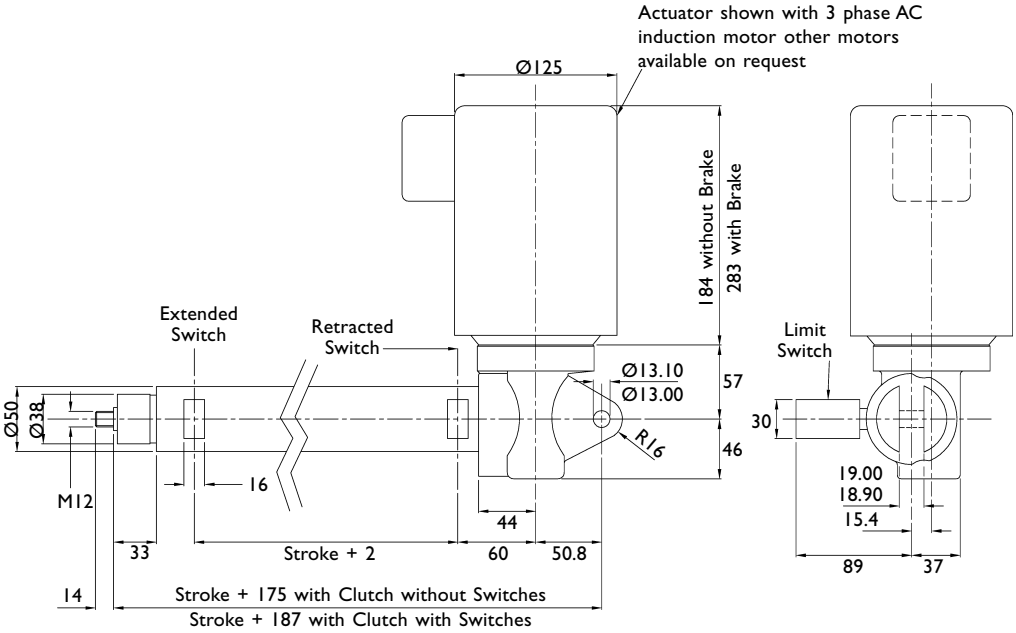

2.1.6.2.2. Model I - NO Emergency Overload CLUTCH

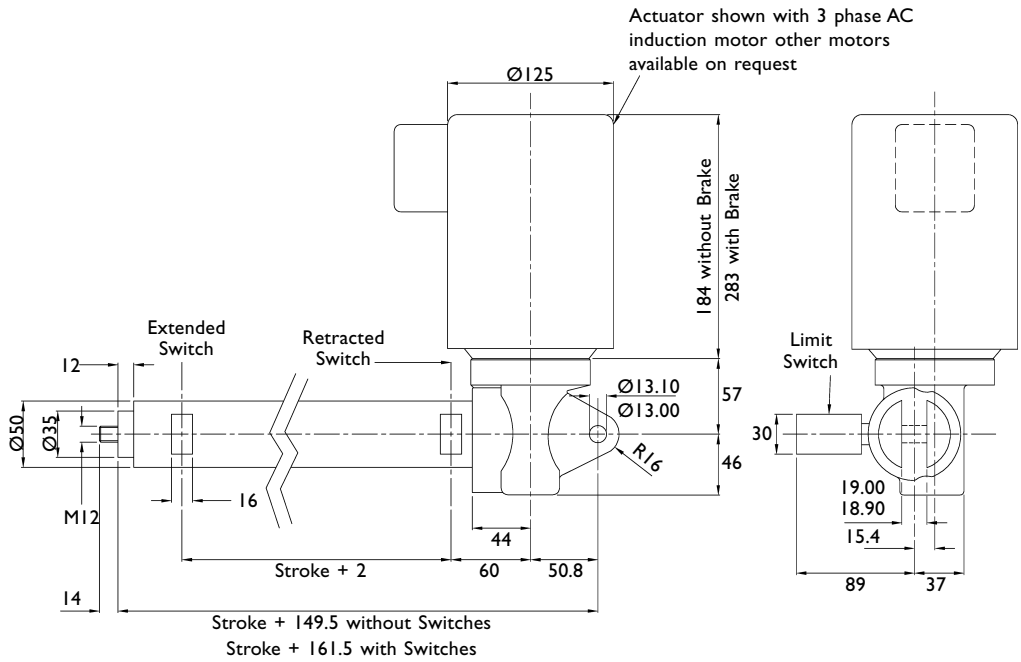

Note: *1. Dimensions subject to change without notive.*
2. All dimensions in millimetres (mm) unless otherwise stated.

2.1.6.3. Model C - Continuous Duty

2.1.6.3.1. Model C - WITH Emergency Overload CLUTCH

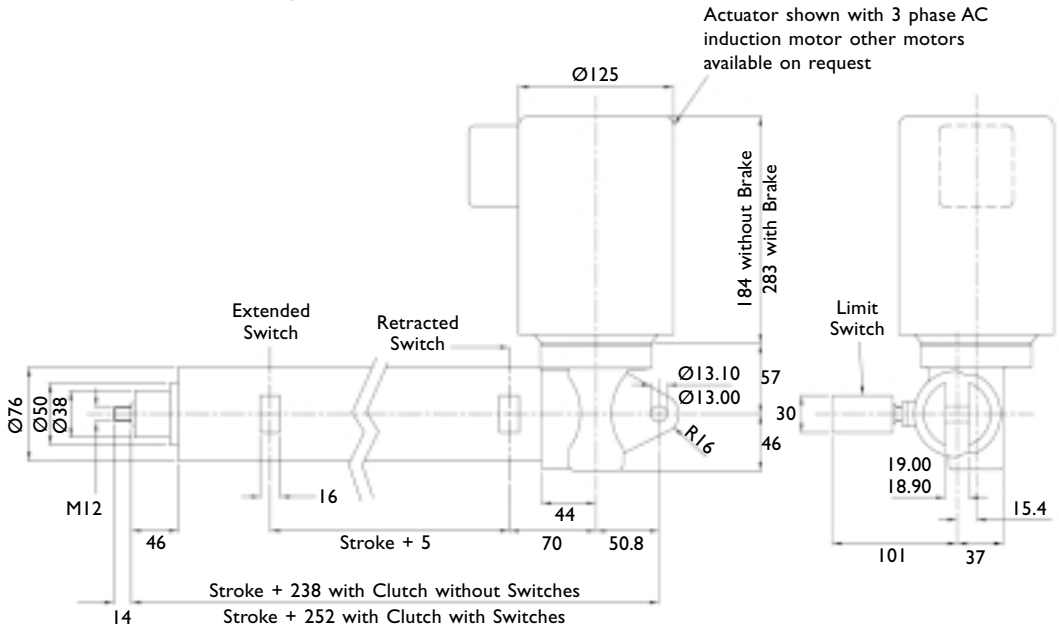

2.1.6.3.2. Model C - NO Emergency Overload CLUTCH

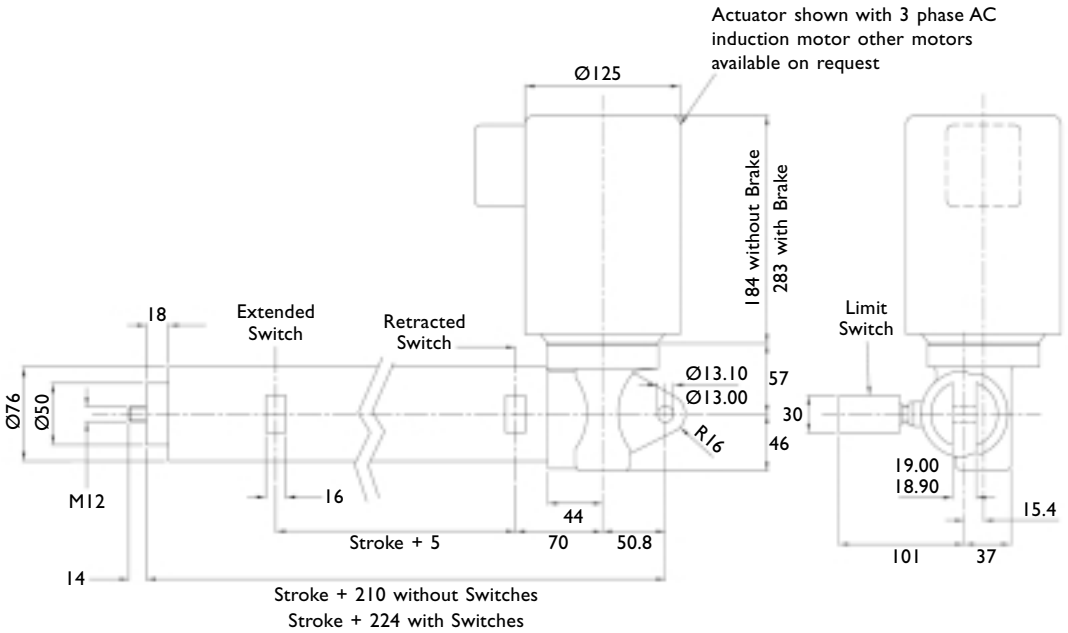

Note: *1. Dimensions subject to change without notive.*
2. All dimensions in millimetres (mm) unless otherwise stated.

2.1.6.4. Model H - High Speed Continuous Duty

2.1.6.4.1. Model H - WITH Emergency Overload CLUTCH

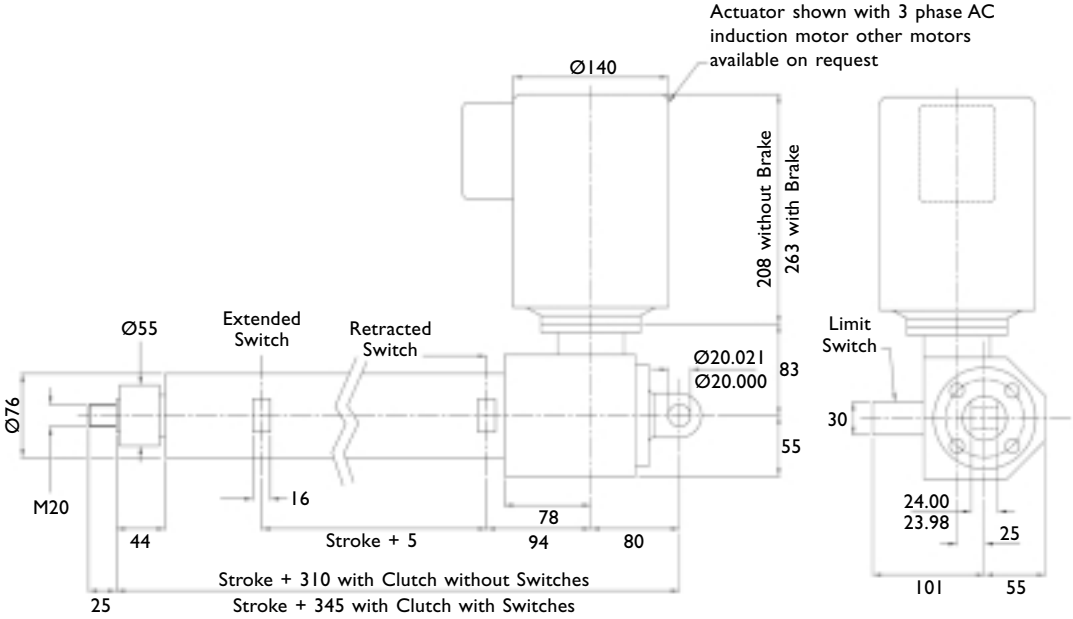

2.1.6.4.2. Model H - NO Emergency Overload CLUTCH

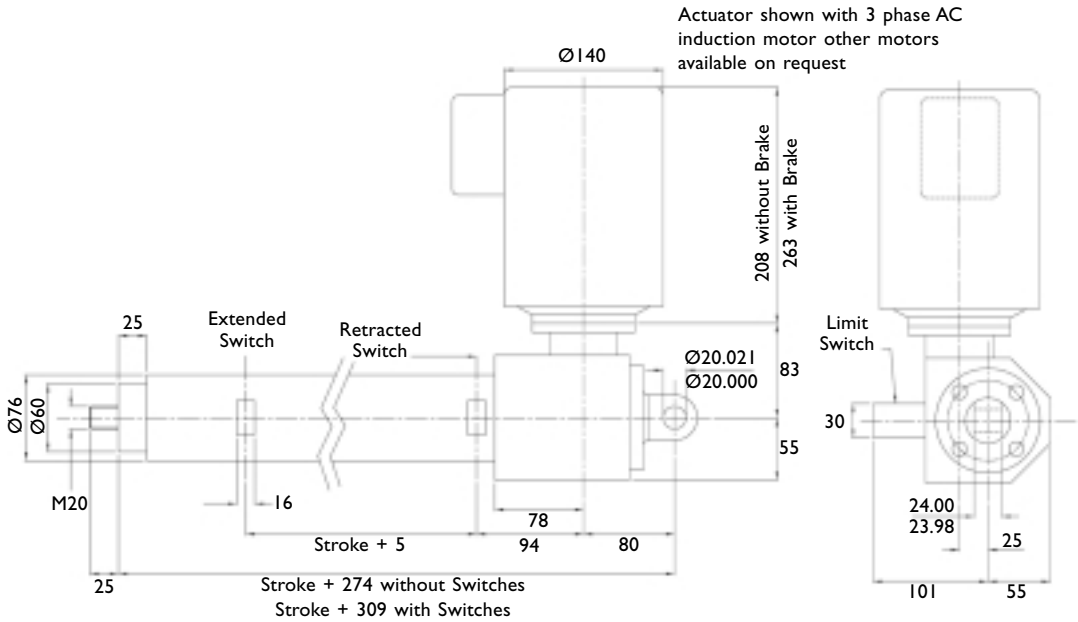

Note: *1. Dimensions subject to change without notive.*
2. All dimensions in millimetres (mm) unless otherwise stated.

2.1.6.5. End Fittings

Clevis End

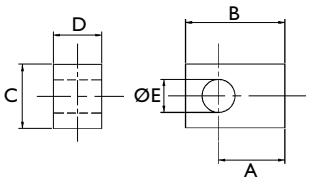

Fork Clevis

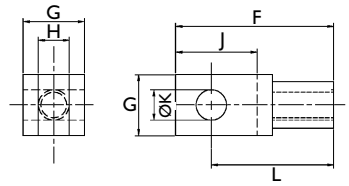

Top Plate

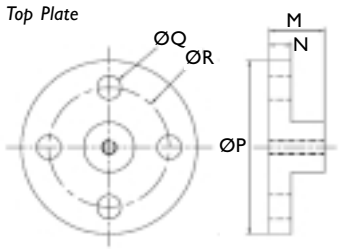

Model	Clevis End					Fork Clevis						Top Plate				
	A	B	C	D	E	F	G	H	J	K	L	M	N	P	Q	R
I	26	39	25	19	13.027 13.000	62	24	12.15 12.33	24	12.000 12.043	48	25	10	80	11	55
C	26	39	25	19	13.027 13.000	62	24	12.15 12.33	24	12.000 12.043	48	25	10	80	11	55
H	41	65	35	30	20.033 20.000	105	40	20.16 20.37	40	20.000 20.052	80	30	12	100	13.5	70

2.1.6.6. Mountings

Model	S	T	U
I	11.99 11.96	70	110
C	14.99 14.96	100	140
H	14.99 14.96	100	140

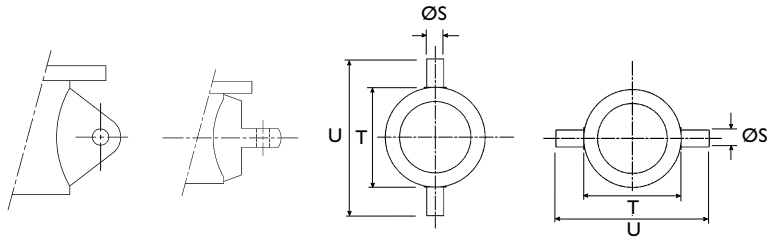

Version 1 *Version 2* *Version 3* *Version 4*

Trunnion Mount Note: *The position of mounting versions 3 and 4 is variable and should be specified by the customer at the time of ordering.*

Alternative Limit Switch Mounting Orientations

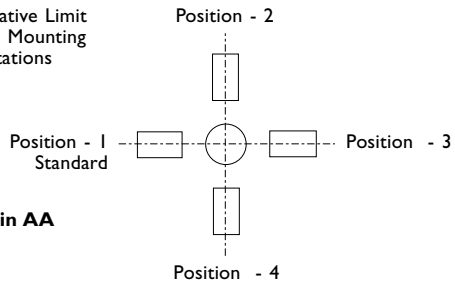

View in AA

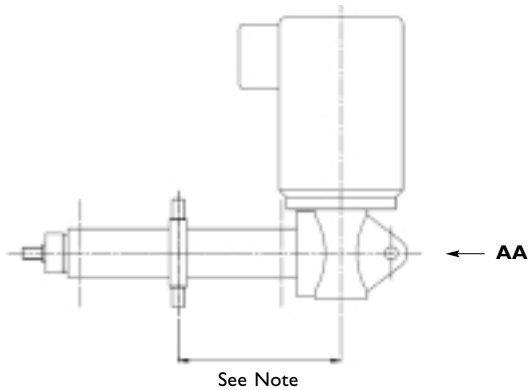

2.1.6.7. Standard Motor Terminal Box Position

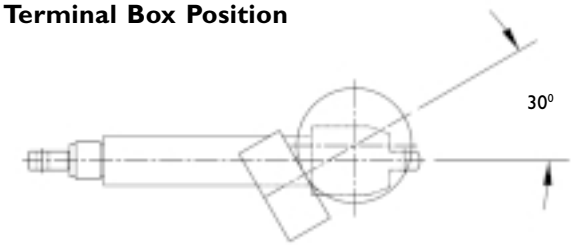

2.1.7. Accessories and Options for EMA Actuators

2.1.7.1. Limit Switches for EMA Actuators

2.1.7.1.1. Standard EMA Actuator Limit Switch

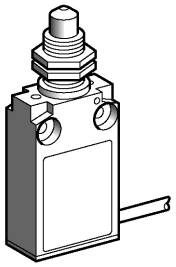

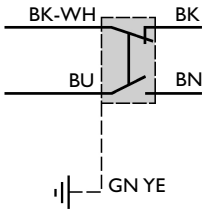

Item	Description
Housing	Metal, compact housing, totally enclosed and sealed
Pre-Cabled	2m PVC cable 5 x 0.75 mm^2 (other cable lengths available on request)
Switch Type	Single-pole, 1 change-over, snap action
Switch Actuation	End of plunger (metal)
Max Actuator Speed	0.5 m/s
Mechanical Durability	10 million operating cycles
Ambient Temperature Operation Storage	 -25° C → +70° C -40° C → +70° C
Product Conformity	IEC947-5-1
Enclosure	IP67
Operating Characteristics	AC-15; B300 (Ue = 240V, Ie = 1.5 A) DC-13; R300 (Ue = 250V, Ie = 0.1 A)
Insulation Voltage	Ui = 300 V

2.1.7.2. Optional EMA Actuator Limit Switch

Other limit switches can be supplied to suit most applications e.g.

- Different sizes, shape, design and enclosure electro-mechanical limit switches.
- Inductive proximity sensor (refer section 8.2.).
- Hazardous Area rated electro-mechanical limit switch.
- High or low temperature rated limit switches or sensors.

For all of these options consult Power Jacks for details.

2.1.7.3. Encoders for EMA Actuators

Encoders for EMA linear actuators can be provided fitted to the rear of the electric motor (beneath the cowling). The encoder specification is in general similar to that shown in section 8.3. For further details please consult Power Jacks.

2.1.7.4. Optional Materials for EMA Actuator Construction

As with all other Power Jacks products these actuators can be manufactured with alternative materials to meet the most demanding application. Consult Power Jacks for advice.

2.1.8. Installation and Maintenance Tips for EMA Actuators

2.1.8.1. Mounting

There are two possible ways of mounting the EMA actuator at the gearbox end. By means of bearing journals for trunnion mounting or clevis mount.

2.1.8.1.1. Rear Clevis

- Mount the actuator by attaching the desired bracket and pin to the clevis end.
- Verify that the ram attachment is aligned throughout the actuator stroke before connecting the ram. The ram attachment will either be pinned or bolted in place depending on chosen model.

2.1.8.1.2. Trunnion Mount

- Mount the actuator by attaching the desired bearings (or mounting feet) to the trunnion pins.
- Verify that the ram attachment is aligned throughout the actuator stroke before connecting the ram. The ram attachment will either be pinned or bolted in place depending on chosen model.

Important Note: *Always ensure that clevis holes align correctly and that they allow for the correct angle of pivoting for the application before operating the actuator.*

Important Note: *Side loads on the actuator ram should be avoided by ensuring that the load is guided. The load guide mechanism should resist the torque developed at the ram by the screw mechanism. A guided ram can be supplied on request, which utilises a keyway in the inner ram, eliminates the need for torsional restraint and therefore allows flexibility in the choice of end fitting.*

The desired mounting orientation will be determined when placing the order; this orientation must be maintained at installation.

2.1.8.2 Maintenance and Lubrication

Unless otherwise specified the actuators are shipped with their full requirement of grease for normal operation. The actuators should not need a lubrication refill within their standard life provided they have been installed and used correctly. Should the unit require lubrication then use one of the following extreme pressure greases or their equivalent:

Shell	Alvania WR2
BP	Energrease LC2
Castrol	Spheerol L-EP2
Mobil	Mobilux EP2

If ambient temperatures exceed 50°C (122°F) consult Power Jacks.

Contents

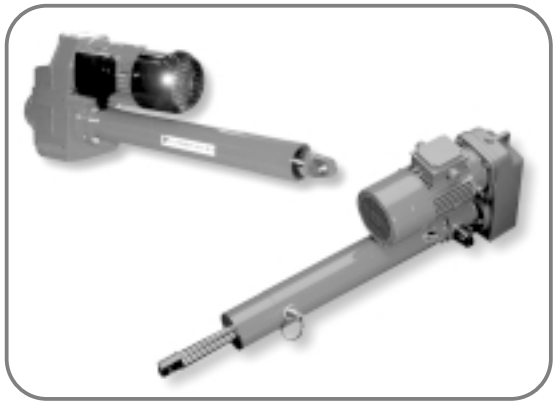

2.2. Rolaram® Linear Actuators

2.2.1. Overview of Rolaram® Linear Actuator Range

2.2.1.1. What is a Rolaram® Linear Actuator?

Rolaram® is an electro-mechanical linear actuator, which consists of either a Spiracon™ or planetary roller screw or a ball screw, driven by an electric motor, through a reduction gearbox. The lead screw converts rotary motion to linear movement. As the screw rotates, the nut extends and retracts the ram, which is attached to the load.

2.2.1.2. The Spiracon™ Roller Screw

This unique patented system consists of a multi-start screw with an involute thread form and a number of planetary rollers with annular grooves, which engage with the screw. These rollers also engage with a grooved load bearing element, which transmits the load through roller thrust bearings, to the nut housing. The rolling action results in a high efficiency mechanism, while the line contact and hardened and ground construction achieves a high dynamic load carrying capacity, along with almost no axial backlash or wear.

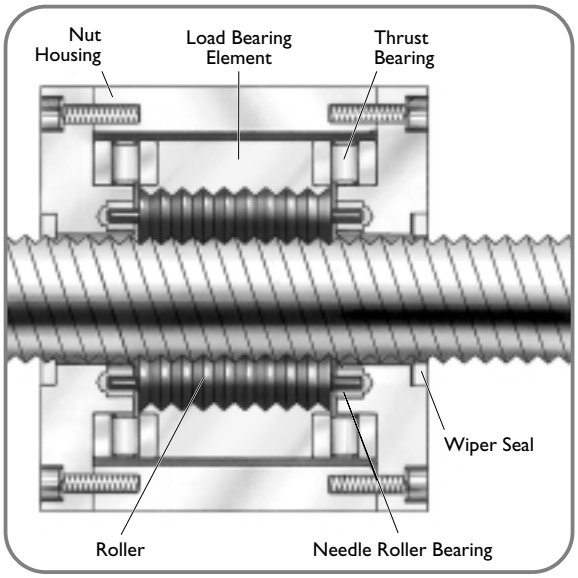

Spiracon Nut

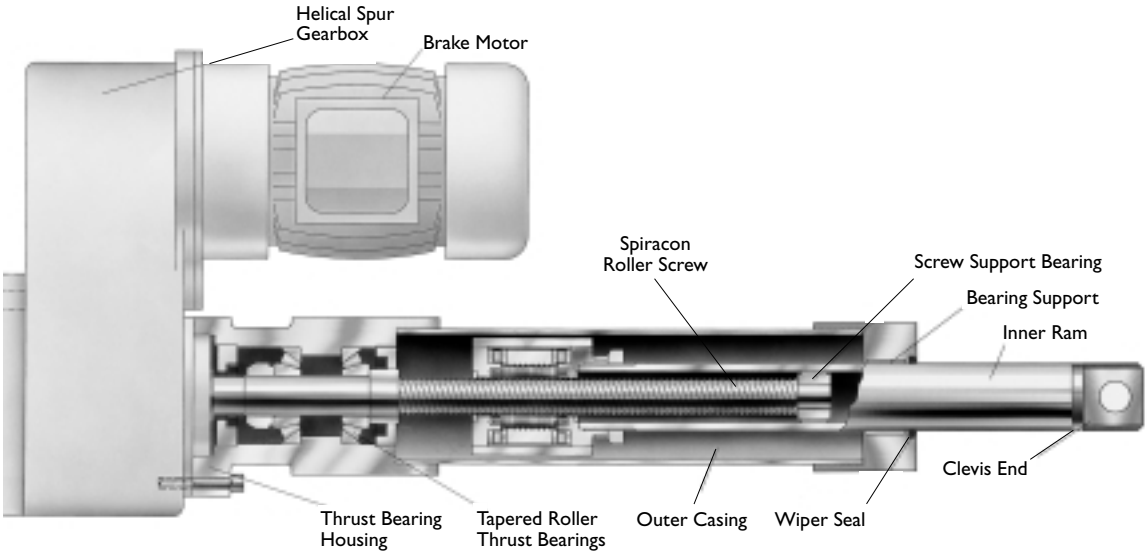

Parallel Configuration

2.2.1.3. Main features of Rolaram® Actuators

- High efficiency screw mechanism and gearbox.
- High dynamic load capacity and wide speed range.
- Controllable for synchronisation.
- Precise repeatability of positioning.
- Long life and low maintenance and running costs.
- Clean operation and low noise.
- Cost effective package.
- Guided ram option.

2.2.1.4. Advantages over other Actuators

Rolaram actuators can not only match the load capacity of hydraulic cylinders and exceed the load capacity of conventional electro mechanical actuators but also provide

- Easy installation, no pipework, powerpack and valves.
- Easy synchronisation of more than one unit.
- Accurate and repeatable positioning using simplified system.
- Low power consumption and running costs.
- No oil leaks, contamination or fire risk.
- Low noise system.
- Higher dynamic capacity, higher speed capability and longer life.

2.2.1.5. Applications for Rolaram® Actuators

Rolaram actuators are well proven throughout the world in a wide variety of industries including

Nuclear	Food Processing
Aerospace	Paper
Metal Processing	Offshore and Marine
Medical	Communications
Automotive	Defence

Typical applications include:

Scissor lifts, lifting platforms, robotics, continuous paint pumps, medical beds, coiling/decoiling machines, tundish cars, continuous operation process lines.

Drive Configurations

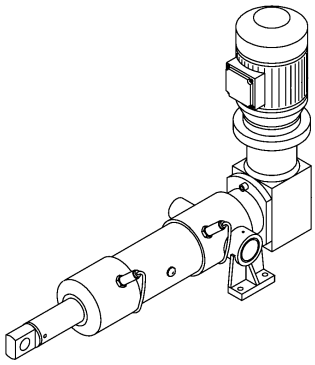

Right Angle

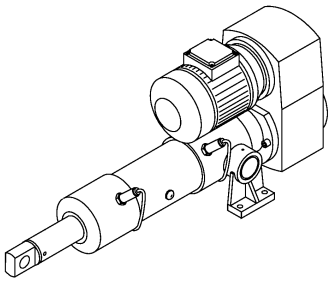

Parallel

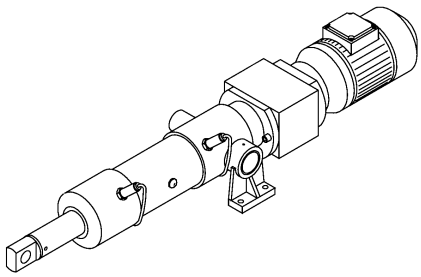

In-Line

2.2.2. Working Applications for Rolaram® Actuators

Application Die splitter for opening up 20 tonne die sets, prior to their use in the production of car body panels.

Linear Actuation Requirements Dies require to be split evenly, with all corners being moved simultaneously, within 5 microns of each other.

Solution 4 identical Rolaram actuators mounted one on each corner of the die splitter. Each driven by a servo motor, controlled by a PLC, to ensure synchronisation of all 4 actuators, within the required limits of positional accuracy. Cranes were previously used to split the dies and the die splitter now represents a considerable time saving in preparing dies for production.

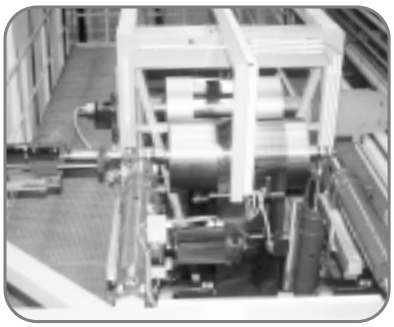

Application European Community funded research project, to monitor the steering roll characteristics on a zincplating line for steel strip. The aim is to optimise downtime and repairs on the line.

Linear Actuation Requirements 5 axis control of the steering roll (X, Y, Z and tilt), to a repeatable positional accuracy of less than 10 microns.

Solution 5 Rolaram actuators, each driven by an AC synchronous servo motor, controlled by a Programmable Multi Axis Control System. The units are fitted with an incremental encoder, a load cell and backlash free gimble mounting.

Operating Characteristics Moving a maximum load of 270kg at a maximum acceleration of 1 metre/second^2 and a maximum speed of 0.5 metre/second, to a repeatable accuracy of less than 10 microns.

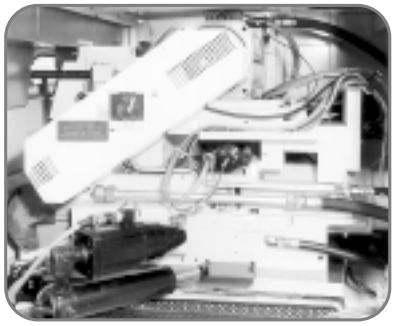

Application Grinding head adjustment to put precise tapers on camshaft cam lobes.

Linear Actuation Requirements Moving a load of 270kg, on a continuous duty cycle, over an operating life of 10 years.

Solution A single Rolaram actuator fitted with an AC servo motor and encoder. Unit is sealed to prevent the ingress of abrasive dust.

Application De-chocking car for removal and refitting of 14 tonne bearing assemblies (chocks) on steel rolls.

Linear Actuation Requirements 4 stage sequence of operation

- Locate car on its rails, parallel to and exactly on centre line of bearing assembly.
- High speed traverse drive to place lift platform under bearing assembly.
- Raise lift platform to sense load of 14 tonne bearing assembly, then move 75 microns to locate centrally around tapered shaft of steel roll.
- Drive platform traverse to clear bearing assembly from shaft (slow speed) then safely locate bearing assembly on car (high speed).

A hydraulic solution was unable to satisfy the above requirements.

Solution A total of 2 Rolaram actuators and 6 Spiracon roller screws, to provide a combination of high speed (up to 45 metres/minute), very slow speed and micron accuracy. Since the de-chocking car has been installed, the time required to prepare rolls for changing at the mill stands has been reduced by up to 50%.

2.2.3. Product Code for Rolaram® Actuators

The product code is of the following form:

(1)									(2)		(3)		(4)				(5)		(6)		(7)		(8)
								-		-		-						-				-	

(1) **Product Code**
An 8 digit code obtained from Technical Charts (refer 2.2.6.)

(2) **Drive Configuration**
R - Right Angle
P - Parallel
H - In-Line

(3) **Unguided/guided**
P - Unguided Ram
K - Guided Ram

(4) **Stroke**
A 4 figure code to represent the required stroke in mm.

(5) **End Fitting**
C - Clevis End
T - Top Plate
S - Screwed End

(6) **Mounting**
RC - Rear Clevis
TN - Trunnion without Feet
TF - Trunnion with Trunnion Feet
TE - Trunnion with Trunnion Feet and End Cap Foot

(7) **Proximity Switches**
P - With stroke detecting Proximity Switches
0 - Without stroke detecting Proximity Switches

(8) **Encoder**
E - With Encoder
0 - Without Encoder

Example Part Number

(1)									(2)		(3)		(4)				(5)		(6)		(7)		(8)
R	0	7	5	0	6	0	0	-	P	-	K	-	0	4	0	0	-	S	-	T	E	-	P	-	0

(1) Model R075 Actuator with linear speed of 600 mm/min
(2) Parallel Drive Configuration
(3) Guided Ram
(4) Stroke of 400 mm
(5) Screwed End Fitting
(6) Trunnion Mounting with Trunnion Feet and End Cap Foot
(7) With Proximity Switches
(8) Without Encoder

Notes: *1. The above part number defines a standard catalogue unit. Where a standard unit does not meet the customer's requirement, Power Jacks will be pleased to design a special unit.*

2.2.4. Rolaram® Linear Actuator Range

There are 8 standard Rolaram models, available in 2 standard drive configurations, each with 10 linear speeds and offering a wide range of load capabilities. The R050, R075, R100 and R125 models are available in a Ball Screw version, for applications where positional accuracy is less important and a more cost effective solution is desired.

Where the standard range does not meet the application specification, special actuators can be designed to meet customers' specific requirements (refer section 2.2.4.1.4.).

2.2.4.1. Dynamic Load Capacity and Linear Speed

Dynamic load capacity from 4 kN to 400 kN (0.4 to 40 tonnes). A wide choice of linear speeds is available, from less than 250 mm/minute to 7000 mm/minute. The speed range is achieved by using a combination of gearbox ratios, screw leads and standard motor speeds. The load/speed curves below illustrate by model how the dynamic load capacity varies with linear speed.

Load/Speed Curves

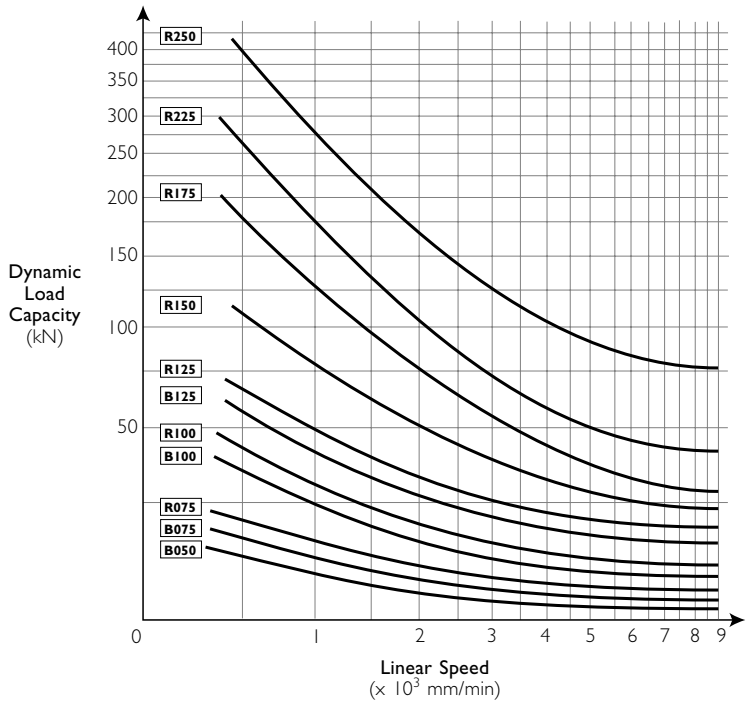

2.2.4.2. Drive

The drive is a standard 415v 3ph AC brake motor, mounted either at right angles or parallel to the actuator ram. The motor is fitted with a brake as standard, to insure that despite the high efficiency screw and gear system, the actuator is self sustaining and will not back drive. High efficiency helical spur and spiral bevel gearing are used to achieve the choice of reduction ratios and the option of a right angle or parallel drive.

2.2.4.3. Stroke

Each model can be provided with a stroke length up to the maximum shown in the Technical Charts. Please note that these strokes allow for the maximum dynamic load in compression. For a tensile load, greater maximum strokes can be accommodated depending on the linear speed. Where the stroke required exceeds the maximum shown, or there is a high static load, please contact our Technical Sales Department.

2.2.4.4. Standard Features

- Right angle or parallel drive configurations.
- Choice of end fittings - clevis, screwed end, top plate.
- Trunnion mounting (with or without feet).
- Rear Clevis.
- Proximity switches, encoder.
- Ball screw version for R075, R100 and R125 models.
- Guided ram.

2.2.4.5. Operating Life and Duty

The actuator models listed in the Technical Charts are capable of very high operating lives (in excess of 10,000 hours for some high speed models). The ball screw version may have a lower life expectancy than the equivalent roller screw version. Due to the almost limitless number of possible configurations, please consult our Technical Sales Department for an estimate of life for individual applications. Continuous duty applications e.g. reciprocating pumping systems can also be realised.

2.2.4.6. Efficiency

The inherent high efficiency of the screw and helical spur and spiral bevel gear system combine to give an overall mechanical efficiency of typically 80%. Power consumption is therefore minimised and a compact actuator is assured.

2.2.4.7. Synchronisation

Synchronisation of two or more Rolaram actuators can be achieved in one of two ways, depending on the requirements of the application:

- Using encoders, synchronous motors or servo systems (i.e. each unit motorised).
- By linking the units mechanically with drive shafting, driven by one common motor.

2.2.4.8. Positional Accuracy

The inherent accuracy of the roller screw and low backlash gearing provide repeatable positioning to within 0.005mm (5 microns), when the actuator is combined with a suitable drive and control system. Ball screw models have a positional accuracy of 50 microns.

2.2.4.9. Guiding the Load

Side loads on the actuator ram should be avoided by ensuring that the load is guided. The load guide mechanism should resist the torque developed at the ram by the screw mechanism, thus precluding the use of spherical end fittings. The guided ram option, which utilises rolling element followers, eliminates the need for torsional restraint and therefore allows flexibility in the choice of end fittings.

2.2.4.10. Mounting Position

The Rolaram actuator can be mounted for operation in any orientation.

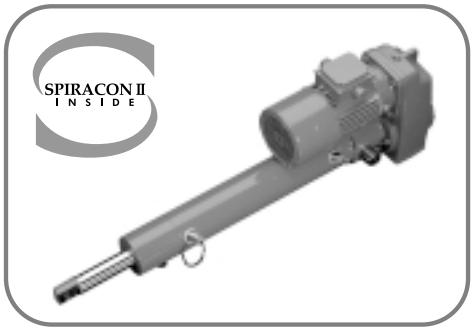

2.2.4.11. Safety Features

- In the event of power failure, the fail-safe brake on the motor will maintain the position of the actuator.
- Totally enclosed and sealed unit.
- Built in proximity switches/limit switches.
- Guided ram version.

2.2.4.12. Operating Environment

All units are constructed and finished to suit industrial operating conditions. The actuator is sealed at the ram and including the standard brake motor is protected to IP55 enclosure. Normal operating temperatures are from -10°C to +50°C. However, Power Jacks products have been proven in very low operating temperatures (-30°C- Arctic) and in very high temperatures (+70°C- steelworks). Please contact our Technical Sales Department to discuss hostile or hazardous operating environments.

2.2.4.13. Lubrication and Maintenance

Rolaram actuators require only a minimum of maintenance during the normal operating life. Depending upon the duty, periodic lubrication should be carried out on the Spiracon roller nut, thrust housing and helical spur/spiral bevel gearbox, according to the application and our recommended maintenance instructions.

2.2.4.14. Specials

The Rolaram concept has been successfully applied in many varied "special" applications, requiring for example

- Very high linear speed (over 50 metres/minute) or acceleration (over 3 metres/sec^2).
- Very high dynamic load (over 1000kN).
- In-line drive configuration.
- Special drive e.g inverter, servo, DC, stepper.
- Temperature extremes or hazardous environment (e.g. subsea).
- Built in load cell.
- Special mounting or restricted space.
- Very low noise (under 60dB).

2.2.5. How to Select a Rolaram® Actuator

There are 4 simple steps as follows :

Step 1

Using the load/speed curves in section 2.2.4., select the actuator model which has an adequate dynamic load capacity for the required linear speed. Positional accuracy and life considerations may dictate selection of the roller screw version for models R075, R100 and R125.

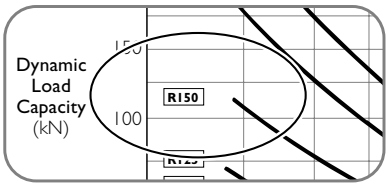

Step 2

Referring to the Technical Charts (section 2.2.6.) for that model, select the nearest linear speed for the chosen right angle or parallel drive configuration.

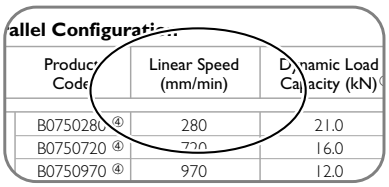

Product Code	Linear Speed (mm/min)	Dynamic Load Capacity (kN)
B0750280 ④	280	21.0
B0750720 ④	720	16.0
B0750970 ④	970	12.0

Step 3

Check the required stroke is within the maximum stroke limit.

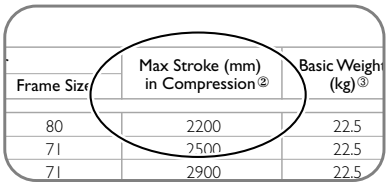

Frame Size	Max Stroke (mm) in Compression ②	Basic Weight (kg) ③
80	2200	22.5
71	2500	22.5
71	2900	22.5

Step 4

Choose the end fitting, mounting arrangement and other options required to complete the full product code shown in section 2.2.3.

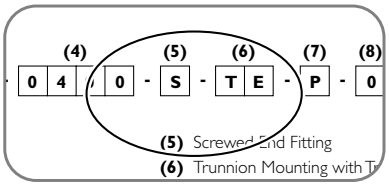

Example Dynamic Load = 50 kN (in compression)

Linear Speed = 900 mm/minute
Stroke = 1500 mm

Parallel drive configuration, unguided ram, fitted with a clevis end, trunnion mounting (without feet) and proximity switches.

Step 1
Using load/speed curves in section 2.2.4., select model ***R125***.

Step 2
Referring to Technical Chart for Model R125-Parallel Configuration on (section 2.2.6.8.), select product code ***R1251040***.

Step 3
The required stroke of ***1500 mm*** is less than the maximum shown (1600 mm).

Step 4
The complete product code is therefore ***R1251040-P-P-1500-C-TN-P-0***.

2.2.6. Rolaram® Performance Data

2.2.6.1. General Rolaram Performance Summary

Load		Up to 400 kN (40 Te)
Linear Speed		Up to 7000 mm/min
Stroke		Up to 5000 mm
Efficiency		80% (typical)
Accuracy	Roller Screw	Up to within 0.005 mm (5 micron)
	Ball Screw	Up to within 0.05 mm (50 micron)
Operating Temperature	Normal	-10° C → +50° C
	Extreme (consult Power Jacks)	-30° C → +70° C
Life		10 000 hours typical as standard at full rated load and speed
Enclosure		IP55

2.2.6.2. Model B050/R050

Parallel Configuration

	Product Code	Linear Speed (mm/min)	Dynamic Load Capacity (kN)①	Motor		Max Stroke (mm) in Compression②	Basic Weight (kg)③
				Power (kW)	Frame Size		
BALL SCREW	B0500260	260	13	0.18	63	835	46
	B0500440	440	11	0.25	63	930	46.5
	B0500550	550	10	0.37	63	990	47
	B0500700	700	9.5	0.37	80	1025	47
	B0501080	1080	8	0.55	80	1140	50
	B0501560	1560	7	0.75	80	1250	50
	B0502150	2150	6.5	0.75	80	1300	50
	B0502750	2750	6	0.75	80	1365	50
	B0503600	3600	5.5	1.1	80	1435	55
	B0505550	5550	4.5	1.1	80	1620	55
ROLLER SCREW	On Application						

Notes
1. *Static load capacity = Dynamic load capacity x 1.5*
2. *For tensile loads, greater maximum strokes can be accommodated, depending on linear speed.*
3. *Total weight = basic weight + 2.2 kg (ball screw) per 100 mm stroke.*
4. *All weights are approximate.*

2.2.6.3. Model B075/R075

Right Angle Configuration

	Product Code	Linear Speed (mm/min)	Dynamic Load Capacity (kN) ①	Motor		Max Stroke (mm) in Compression ②	Basic Weight (kg) ③
				Power (kW)	Frame Size		
BALL SCREW	B0750280 ④	280	21.0	0.18	80	2200	22.5
	B0750720 ④	720	16.0	0.25	71	2500	22.5
	B0750970 ④	970	12.0	0.25	71	2900	22.5
	B0751270	1270	9.0	0.25	71	3200	22.5
	B0751470	1470	7.8	0.25	71	3500	22.5
	B0751650	1650	7.0	0.37	71	4000	22.5
	B0752560	2560	6.6	0.37	71	4000	22.5
	B0754030	4030	6.2	0.55	71	3400	22.5
	B0754700	4700	5.3	0.55	71	3100	22.5
	B0757130	7130	4.8	0.75	80	2500	36.5
ROLLER SCREW	R0750240 ④	240	23.0	0.12	71	400	22.5
	R0750620 ④	620	19.0	0.25	71	450	22.5
	R0750840 ④	840	14.0	0.25	71	530	22.5
	R0751010	1010	11.5	0.25	71	600	22.5
	R0751280	1280	9.0	0.25	71	690	22.5
	R0751850	1850	9.3	0.37	71	690	22.5
	R0752400	2400	7.2	0.37	71	750	22.5
	R0754290	4290	6.0	0.55	71	750	22.5
	R0754800	4800	5.4	0.55	71	800	22.5
	R0757000	7000	5.0	0.75	80	800	36.5

Notes:

① *Static load capacity = Dynamic load capacity x 1.5.*

② *For tensile loads, greater maximum strokes can be accommodated, depending on the linear speed.*

③ *Total weight = Basic weight + 2.4 kg (ball screw) or 1.0 kg (roller screw) per 100 mm stroke. All weights are approximate.*

④ *Dimension AB applies (motor axis offset).*

2.2.6.4. Model B075/R075

Parallel Configuration

	Product Code	Linear Speed (mm/min)	Dynamic Load Capacity (kN) ①	Motor		Max Stroke (mm) in Compression ②	Basic Weight (kg) ③
				Power (kW)	Frame Size		
BALL SCREW	B0750250	250	22.0	0.12	63	2200	29.0
	B0750670	670	17.0	0.25	71	2500	29.0
	B0751340	1340	12.7	0.37	71	2900	30.0
	B0751600	1600	10.5	0.37	71	3200	30.0
	B0751960	1960	8.6	0.37	71	3500	30.0
	B0752670	2670	6.4	0.37	71	4100	30.0
	B0753200	3200	5.3	0.37	71	3800	30.0
	B0755400	5400	4.7	0.55	71	2900	30.0
	B0756080	6080	4.1	0.55	71	2700	30.0
	B0756770	6770	3.7	0.55	71	2600	30.0
ROLLER SCREW	R0750220	220	24.0	0.12	63	400	29.0
	R0750600	600	19.0	0.25	63	450	29.0
	R0751020	1020	17.0	0.37	71	480	30.0
	R0751220	1220	14.3	0.37	71	530	30.0
	R0751570	1570	11.2	0.37	71	600	30.0
	R0752040	2040	8.5	0.37	71	690	30.0
	R0752610	2610	6.7	0.37	71	770	30.0
	R0754070	4070	6.5	0.55	71	780	30.0
	R0755930	5930	4.4	0.55	71	940	30.0
	R0757120	7120	3.7	0.55	71	1000	30.0

Notes:

① *Static load capacity = Dynamic load capacity x 1.5.*

② *For tensile loads, greater maximum strokes can be accommodated, depending on the linear speed.*

③ *Total weight = Basic weight + 2.4 kg (ball screw) or 1.0 kg (roller screw) per 100 mm stroke. All weights are approximate.*

2.2.6.5. Model B100/R100

Right Angle Configuration

	Product Code	Linear Speed (mm/min)	Dynamic Load Capacity (kN)①	Motor		Max Stroke (mm) in Compression②	Basic Weight (kg)③
				Power (kW)	Frame Size		
BALL SCREW	B1000280 ④	280	41.5	0.25	80	2400	40.0
	B1000350 ④	350	33.0	0.25	80	2700	40.0
	B1000970 ④	970	26.0	0.55	80	3000	40.0
	B1001280	1280	19.5	0.55	80	3500	40.0
	B1001660	1660	15.0	0.55	80	4000	40.0
	B1002380	2380	14.4	0.75	80	4100	40.0
	B1002590	2590	13.2	0.75	80	4200	40.0
	B1004100	4100	12.2	1.1	80	3700	40.0
	B1004780	4780	10.5	1.1	80	3400	40.0
	B1007180	7180	9.6	1.5	90	2800	45.0
ROLLER SCREW	R1000240 ④	240	48.0	0.25	80	850	40.0
	R1000300 ④	300	38.0	0.25	80	900	40.0
	R1000840 ④	840	30.5	0.55	80	1100	40.0
	R1001010	1010	25.5	0.55	80	1200	40.0
	R1001280	1280	20.0	0.55	80	1400	40.0
	R1001840	1840	19.0	0.75	80	1400	40.0
	R1002380	2380	14.8	0.75	80	1500	40.0
	R1004410	4410	11.7	1.1	80	1750	40.0
	R1004920	4920	10.4	1.1	80	1800	40.0
	R1007080	7080	9.9	1.5	90	1800	49.0

Notes:

① *Static load capacity = Dynamic load capacity x 1.5.*

② *For tensile loads, greater maximum strokes can be accommodated, depending on the linear speed.*

③ *Total weight = Basic weight + 3.3 kg (ball screw) or 1.6 kg (roller screw) per 100 mm stroke. All weights are approximate.*

④ *Dimension AB applies (motor axis offset).*

2.2.6.6. Model B100/R100

Parallel Configuration

	Product Code	Linear Speed (mm/min)	Dynamic Load Capacity (kN)①	Motor		Max Stroke (mm) in Compression②	Basic Weight (kg)③
				Power (kW)	Frame Size		
BALL SCREW	B1000270	270	42.0	0.25	71	2400	47.0
	B1000530	530	32.0	0.37	71	2700	47.0
	B1000930	930	27.0	0.55	80	3000	47.0
	B1001260	1260	20.0	0.55	80	3500	47.0
	B1001680	1680	15.0	0.55	80	4000	47.0
	B1002090	2090	12.0	0.55	80	4500	47.0
	B1003060	3060	11.2	0.75	80	4200	50.0
	B1004290	4290	8.0	0.75	80	3600	50.0
	B1006770	6770	7.4	1.1	80	2800	50.0
	B1007580	7580	6.6	1.1	80	2700	50.0
ROLLER SCREW	R1000360	360	50.0	0.37	71	800	47.0
	R1000490	490	35.5	0.37	71	900	47.0
	R1000930	930	28.0	0.55	71	1100	47.0
	R1001140	1140	23.0	0.55	71	1200	47.0
	R1001510	1510	16.4	0.55	71	1400	47.0
	R1001900	1900	13.7	0.55	71	1500	47.0
	R1002880	2880	13.0	0.75	80	1600	50.0
	R1003900	3900	9.1	0.75	80	1800	50.0
	R1006430	6430	8.1	1.1	80	1800	50.0
	R1007200	7200	7.2	1.1	80	1900	50.0

Notes:

① *Static load capacity = Dynamic load capacity x 1.5.*

② *For tensile loads, greater maximum strokes can be accommodated, depending on the linear speed.*

③ *Total weight = Basic weight + 3.3 kg (ball screw) or 1.6 kg (roller screw) per 100 mm stroke. All weights are approximate.*

2.2.6.7. Model B125/R125

Right Angle Configuration

	Product Code	Linear Speed (mm/min)	Dynamic Load Capacity (kN)①	Motor		Max Stroke (mm) in Compression②	Basic Weight (kg)③
				Power (kW)	Frame Size		
BALL SCREW	B1250380 ④	380	65.0	0.55	80	1900	61.0
	B1250630 ④	630	54.0	0.75	90	2100	61.0
	B1251180	1180	42.5	1.1	90	2300	61.0
	B1252030	2030	34.0	1.5	90	2600	61.0
	B1252370	2370	29.0	1.5	90	2900	61.0
	B1253020	3020	22.8	1.5	90	3200	61.0
	B1253380	3380	20.4	1.5	90	3400	61.0
	B1254100	4100	16.8	1.5	90	3700	61.0
	B1254780	4780	14.4	1.5	90	3400	61.0
	B1257130	7130	14.0	2.2	100	2800	68.0
ROLLER SCREW	R1250330 ④	330	78.0	0.55	90	1600	61.0
	R1250550 ④	550	64.0	0.75	90	1800	61.0
	R1250890	890	58.0	1.1	90	1900	61.0
	R1251390	1390	50.5	1.5	90	2000	61.0
	R1251760	1760	40.0	1.5	90	2100	61.0
	R1252000	2000	37.0	1.5	90	2200	61.0
	R1252450	2450	28.5	1.5	90	2400	61.0
	R1254440	4440	23.2	2.2	90	2600	61.0
	R1254960	4960	20.7	2.2	90	2600	61.0
	R1257180	7180	19.5	3.0	90	2600	72.0

Notes:

① *Static load capacity = Dynamic load capacity x 1.5.*

② *For tensile loads, greater maximum strokes can be accommodated, depending on the linear speed.*

③ *Total weight = Basic weight + 4.2 kg (ball screw) or 2.2 kg (roller screw) per 100 mm stroke. All weights are approximate.*

④ *Dimension AB applies (motor axis offset).*

2.2.6.8. Model B125/R125

Parallel Configuration

	Product Code	Linear Speed (mm/min)	Dynamic Load Capacity (kN)①	Motor		Max Stroke (mm) in Compression②	Basic Weight (kg)③
				Power (kW)	Frame Size		
BALL SCREW	B1250390	390	64.0	0.55	80	1900	78.0
	B1250620	620	55.5	0.75	80	2000	78.0
	B1251090	1090	46.0	1.1	90	2200	82.0
	B1251990	1990	34.0	1.5	90	2600	82.0
	B1253420	3420	29.0	2.2	90	2900	82.0
	B1254040	4040	25.0	2.2	90	3100	82.0
	B1255010	5010	20.0	2.2	90	3300	82.0
	B1255820	5820	17.0	2.2	90	3100	82.0
	B1256860	6860	14.6	2.2	90	2800	82.0
	B1258510	8510	11.8	2.2	90	2500	82.0
ROLLER SCREW	R1250330	330	80.0	0.55	80	1500	78.0
	R1250770	770	68.0	1.1	80	1600	78.0
	R1251040	1040	67.6	1.5	90	1600	82.0
	R1251530	1530	46.0	1.5	90	2000	82.0
	R1252380	2380	43.6	2.2	90	2040	82.0
	R1252980	2980	34.8	2.2	90	2200	82.0
	R1253610	3610	28.8	2.2	90	2400	82.0
	R1254240	4240	24.5	2.2	90	2500	82.0
	R1255130	5130	20.2	2.2	90	2700	82.0
	R1256060	6060	17.1	2.2	90	2740	82.0

Notes:

① *Static load capacity = Dynamic load capacity x 1.5.*

② *For tensile loads, greater maximum strokes can be accommodated, depending on the linear speed.*

③ *Total weight = Basic weight + 4.2 kg (ball screw) or 2.2 kg (roller screw) per 100 mm stroke. All weights are approximate.*

2.2.6.9. Model R150

	Product Code	Linear Speed (mm/min)	Dynamic Load Capacity (kN)①	Motor		Max Stroke (mm) in Compression②	Basic Weight (kg)③
				Power (kW)	Frame Size		
Right Angle Configuration							
ROLLER SCREW	R1500440④	440	118.0	1.1	90	2180	90.0
	R1500760④	760	92.0	1.5	100	2300	100.0
	R1501160④	1160	88.6	2.2	100	2300	100.0
	R1501400	1400	73.5	2.2	100	2650	100.0
	R1501770	1770	58.2	2.2	100	2800	100.0
	R1501910	1910	53.9	2.2	100	3000	100.0
	R1503590	3590	39.1	3.0	100	3300	100.0
	R1504530	4530	30.9	3.0	100	3600	100.0
	R1505060	5060	27.7	3.0	100	3500	100.0
	R1507230	7230	25.9	4.0	112	3500	105.0
Parallel Configuration							
ROLLER SCREW	R1500420	420	122.0	1.1	90	2000	101.0
	R1500680	680	103.8	1.5	90	2180	101.0
	R1501070	1070	97.4	2.2	90	2200	101.0
	R1501420	1420	73.0	2.2	90	2500	101.0
	R1501810	1810	57.4	2.2	90	2800	101.0
	R1502260	2260	45.8	2.2	90	3200	101.0
	R1502980	2980	34.8	2.2	90	3500	101.0
	R1503610	3610	28.8	2.2	90	3600	101.0
	R1504240	4240	24.5	2.2	90	3700	101.0
	R1506060	6060	17.1	2.2	90	3500	101.0

2.2.6.10. Model R175

	Product Code	Linear Speed (mm/min)	Dynamic Load Capacity (kN)①	Motor		Max Stroke (mm) in Compression②	Basic Weight (kg)③
				Power (kW)	Frame Size		
Right Angle Configuration							
ROLLER SCREW	R1750460④	460	225.0	2.2	112	2200	165.0
	R1750570④	570	180.0	2.2	112	2400	165.0
	R1751160④	1160	121.0	3.0	100	3000	161.0
	R1751810	1810	103.6	4.0	112	3100	165.0
	R1752020	2020	92.7	4.0	112	3300	165.0
	R1752860	2860	65.4	4.0	112	3800	165.0
	R1753610	3610	51.8	4.0	112	4000	165.0
	R1754560	4560	41.0	4.0	112	4000	165.0
	R1755100	5100	36.7	4.0	112	3800	165.0
	R1757230	7230	35.6	5.5	132	3600	210.0
Parallel Configuration							
ROLLER SCREW	R1750220	220	210.0	1.1	90	2200	158.0
	R1750650	650	176.0	2.2	100	2400	168.0
	R1751120	1120	140.0	3.0	100	2700	168.0
	R1751330	1330	117.0	3.0	100	3000	168.0
	R1751880	1880	102.8	4.0	112	3100	175.0
	R1752140	2140	83.7	4.0	112	3400	175.0
	R1752680	2680	67.0	4.0	112	3800	175.0
	R1753300	3300	53.4	4.0	112	4000	175.0
	R1754760	4760	40.2	4.0	112	4000	175.0
	R1755690	5690	32.6	4.0	112	3900	175.0

Notes:

① *Static load capacity = Dynamic load capacity x 1.5.*
② *For tensile loads, greater maximum strokes can be accommodated, depending on the linear speed.*
③ *Total weight = Basic weight + 2.8 kg (R150) or 3.9 kg (R175) per 100 mm stroke. All weights are approximate.*
④ *Dimension AB applies (motor axis offset).*

2.2.6.11. Model R225

	Product Code	Linear Speed (mm/min)	Dynamic Load Capacity (kN)①	Motor		Max Stroke (mm) in Compression②	Basic Weight (kg)③
				Power (kW)	Frame Size		
Right Angle Configuration							
ROLLER SCREW	R2250340④	340	300.0	2.2	132	3000	307.0
	R2250580④	580	240.0	3.0	132	3300	311.0
	R2250880④	880	212.5	4.0	112	3500	285.0
	R2251180④	1180	158.0	4.0	112	3950	285.0
	R2251820	1820	141.4	5.5	132	4100	306.0
	R2252880	2880	89.3	5.5	132	4800	306.0
	R2253610	3610	71.2	5.5	132	4900	306.0
	R2254560	4560	56.3	5.5	132	4600	306.0
	R2255100	5100	50.4	5.5	132	4600	306.0
	R2257230	7230	48.5	7.5	132	4500	316.0
Parallel Configuration							
ROLLER SCREW	R2250370	370	280.0	2.2	100	3000	297.0
	R2250750	750	246.0	4.0	112	3200	301.0
	R2251010	1010	196.5	4.0	112	3500	301.0
	R2251250	1250	184.0	4.0	112	3600	301.0
	R2251480	1480	174.4	5.5	132	3700	348.0
	R2252610	2610	124.7	5.5	132	4200	348.0
	R2252860	2860	90.0	5.5	132	4800	348.0
	R2253490	3490	73.8	5.5	132	4900	348.0
	R2254960	4960	51.9	5.5	132	4700	348.0
	R2256720	6720	43.9	5.5	132	4600	348.0

2.2.6.12. Model R250

	Product Code	Linear Speed (mm/min)	Dynamic Load Capacity (kN)①	Motor		Max Stroke (mm) in Compression②	Basic Weight (kg)③
				Power (kW)	Frame Size		
Right Angle Configuration							
ROLLER SCREW	R2500470④	470	402.0	4.0	132	3000	405.0
	R2500790④	790	327.0	5.5	132	3200	417.0
	R2501190④	1190	294.0	7.5	132	3500	431.0
	R2501440	1440	243.5	7.5	132	3800	431.0
	R2501820	1820	192.8	7.5	132	4100	431.0
	R2502030	2030	172.5	7.5	132	4300	431.0
	R2503000④	3000	143.4	9.5	132	4500	441.0
	R2503630	3630	118.6	9.5	132	4800	431.0
	R2505150	5150	99.8	11.0	160	4500	457.0
	R2507330	7330	95.7	15.0	160	4500	467.0
Parallel Configuration							
ROLLER SCREW	R2500670	670	386.0	5.5	132	3000	483.0
	R2501140	1140	329.0	7.5	132	3300	483.0
	R2501340	1340	262.5	7.5	132	3600	483.0
	R2501860	1860	250.5	9.5	132	3750	483.0
	R2502350	2350	189.8	9.5	132	4100	483.0
	R2502820	2820	165.3	9.5	132	4300	483.0
	R2503520	3520	132.3	9.5	132	4700	483.0
	R2504080	4080	116.5	9.5	132	4800	483.0
	R2504630	4630	95.0	9.5	132	4800	483.0
	R2505560	5560	75.3	9.5	132	4600	483.0

Notes:

① *Static load capacity = Dynamic load capacity x 1.5.*

② *For tensile loads, greater maximum strokes can be accommodated, depending on the linear speed.*

③ *Total weight = Basic weight + 5.1 kg (R225) or 5.8 kg (R250) per 100 mm stroke. All weights are approximate.*

④ *Dimension AB applies (motor axis offset).*

2.2.7. Rolaram Linear Actuator Dimensions

2.2.7.1. Rolaram - Parallel Motor Configuration - Trunnion Mount

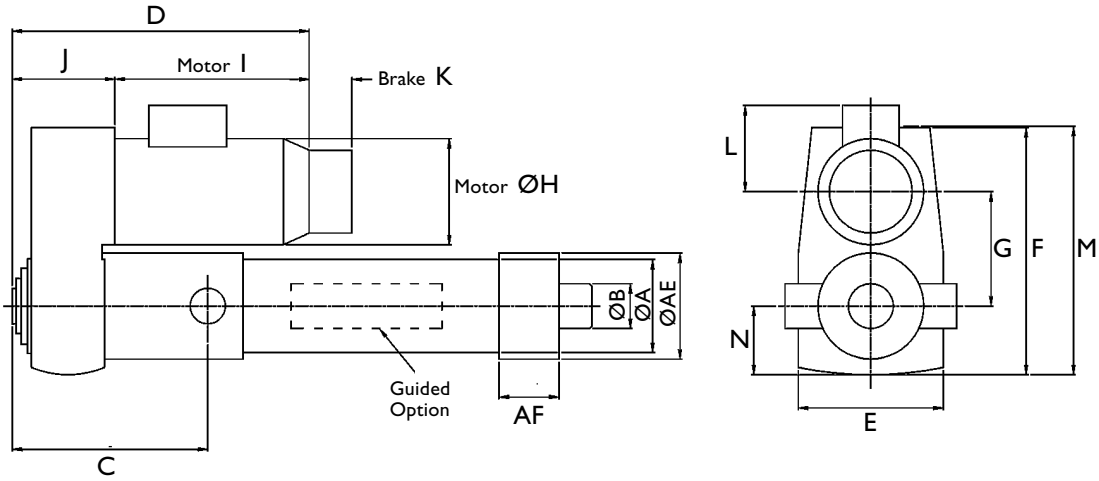

2.2.7.1.1. Rolaram Actuators with Roller Screw

Size	R050		R075		R100		R125		R150	R175			R225		R250	
	Frame 63	Frame 80	Frame 63	Frame 71	Frame 71	Frame 80	Frame 80	Frame 90	Frame 90	Frame 90	Frame 100	Frame 112	Frame 100	Frame 112	Frame 132	Frame 132
AØ	Available on request	Available on request	102		120		145		175	195			255		275	
BØ			40		50		70		90	110			140		150	
C			208		248		305		320	385			465		560	
D			340	360	385	409	426	463	463	510	545	3568	558	581	660	750
E			158		190		226		226	255			306		350	
F			264	272	337	337	385	385	385	454	454	454	522	522	530	586
G			122		147		178		178	206			251		281	
HØ			130	145	145	162	162	181	181	181	203	228	203	228	266	266
I			227	248	242	266	266	303	303	310	345	368	345	368	447	443
J			118		143		160		160	200			213		307	
K			60	68	68	67	67	75	75	75	90	95	90	95	122	122
L			113	125	125	137	137	147	147	147	158	171	158	171	196	196
M			267		324		387		387	438			527		581	
N			77		90		107		107	123			146		172	
AE			110		142		160		185	206			270		285	
AF			125		110		145		180	165			180		190	

2.2.7.1.2. Rolaram Actuators with Ball Screw

Size	B050		B075		B100		B125	
	Frame 63	Frame 80	Frame 63	Frame 71	Frame 71	Frame 80	Frame 80	Frame 90
AØ	Available on request	Available on request	102		120		145	
BØ			75		92		106	
C			208		248		305	
D			340	360	385	409	426	463
E			158		190		226	
F			264	272	337	337	385	385
G			122		147		178	
HØ			130	145	145	162	162	181
I			227	248	242	266	266	303
J			118		143		160	
K			60	68	68	67	67	75
L			113	125	125	137	137	147
M			267		324		387	
N			77		90		107	
AE			110		142		160	
AF			125		110		145	

Notes
1. *All dimensions are in millimeteres (mm) unless otherwise stated.*
2. *"Frame" refers to IEC motor frame size.*
3. *Dimensions subject to change without notice.*

2.2.7.2. Rolaram® - Parallel Motor Configuration - Rear Clevis Mount

New Rolaram with rear clevis mounting enables the actuator to be configured for double clevis arrangements.

Details below are for the **B050 Rolaram Actuator only.** For all other sizes contact Power Jacks.

NEW

2.2.7.2.1. B050 - Rolaram®

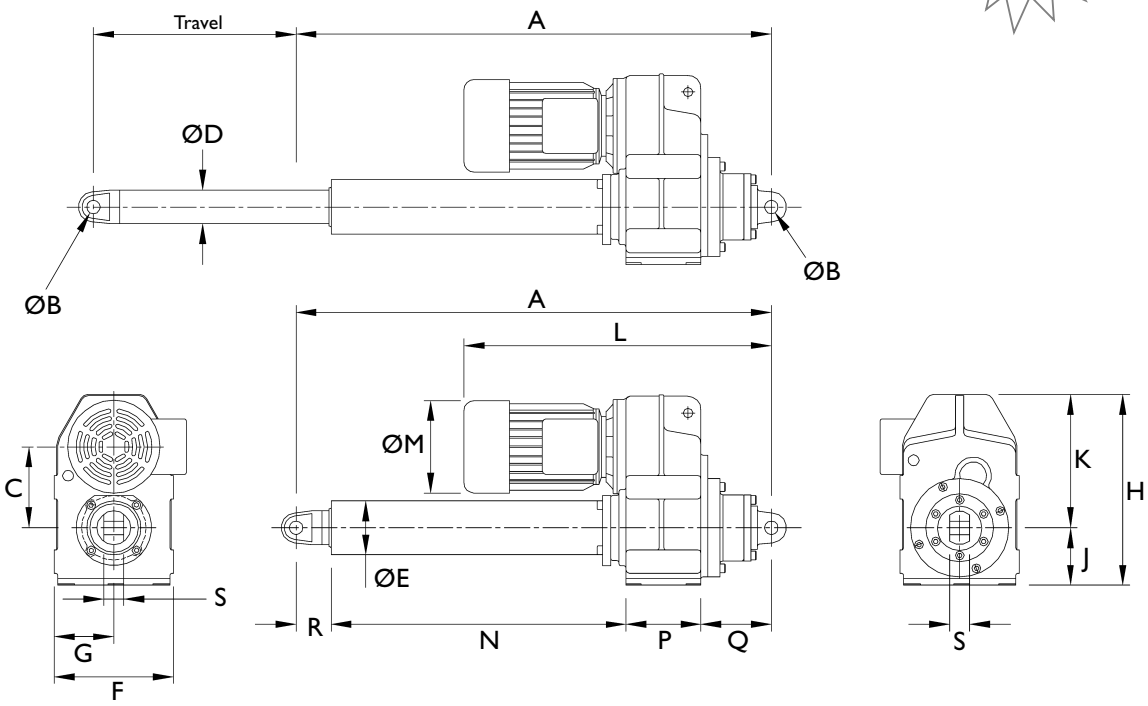

Standard Clevis, Top Plate and Threaded Ends are available on request.

Frame	A	B	C	D	E	F	G	H
63	432 + Stroke	20 H8	120	50	80	176	88	282
71	432 + Stroke	20 H8	120	50	80	176	88	282
80	432 + Stroke	20 H8	120	50	80	176	88	282

Frame	J	K	L	M	N	P	Q	R	S
63	85	197	471	122	160 + Stroke	112	110	50	25
71	85	197	499	137	160 + Stroke	112	110	50	25
80	85	197	543	158	160 + Stroke	112	110	50	25

Notes 1. *All dimensions are in millimetres (mm) unless otherwise stated.*
2. *"Frame" refers to IEC motor frame size.*
3. *Dimensions subject to change without notice.*

2.2.7.3. Rolaram® - Right Angled Motor Configuration - Trunnion Mount

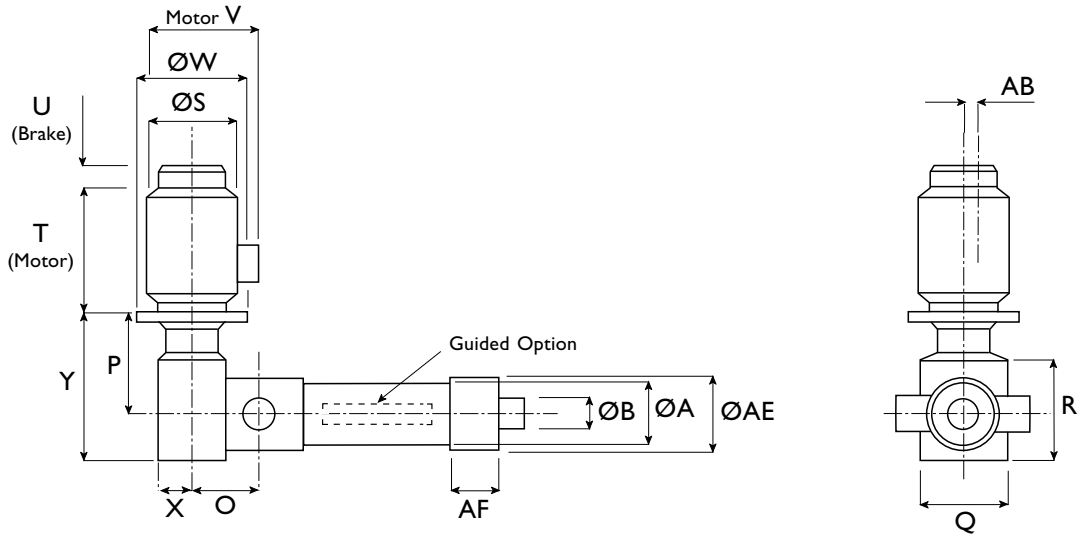

2.2.7.3.1. Roller Screw and Ball Screw

	R/B 050		R/B 075		R/B 100		R/B 125		R/B 150		
Size			Frame 71	Frame 80	Frame 80	Frame 90	Frame 90	Frame 100	Frame 90	Frame 100	Frame 112
O	Available on request	Available on request	157.5		190		210		236.5		
P			155 max	209 max	233 max	245 max	243max	255 max	285 max	295 max	292 max
Q			110		140		140		170		
R			158		193		193		235		
SØ			145	162	162	181	181	203	181	203	228
T			207	232	232	275	275	305	275	305	325
U			68	67	67	75	75	90	75	90	95
V			186	223	223	226	226	261	226	261	273
WØ			160	200	200	200	200	250	200	250	250
X			62		60		72		85		
Y			220.5 max	274.5 max	316 max	328 max	326 max	338 max	383 max	393 max	390 max
AB			10		12		12		18		
AE			110		142		160		185		
AF			125		110		145		180		

	R/B 175			R/B 225		R/B 250	
Size	Frame 100	Frame 112	Frame 132	Frame 112	Frame 132	Frame 132	Frame 160
O	300			365		370	
P	270 max	343 max	363 max	332 max	427 max	383 max	383max
Q	210			240		280	
R	291			338		406	
SØ	203	228	266	228	266	266	326
T	305	325	395	325	395	395	521
U	90	95	122	95	122	122	130
V	261	273	323	273	323	323	380
WØ	250	250	300	250	300	300	350
X	107			128		151	
Y	391 max	464 max	484 max	468 max	563 max	546 max	546 max
AB	22			26		32	
AE	206			270		285	
AF	165			180		190	

Notes 1. *All dimensions are in millimeteres (mm) unless otherwise stated.*
2. *"Frame" refers to IEC motor frame size.*
3. *Dimensions subject to change without notice.*

2.2.7.4. End Fittings and Mountings

Top Plate

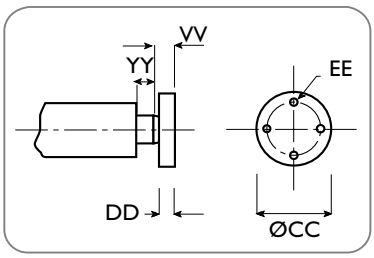

Clevis End

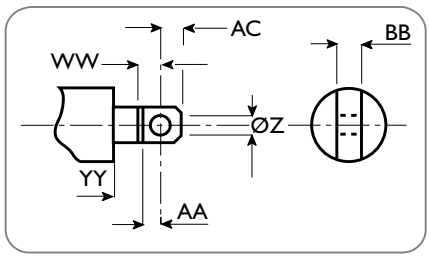

Screwed End

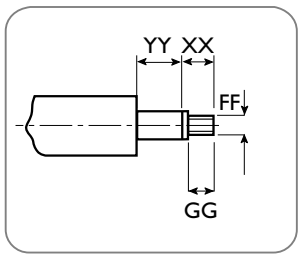

Trunnion

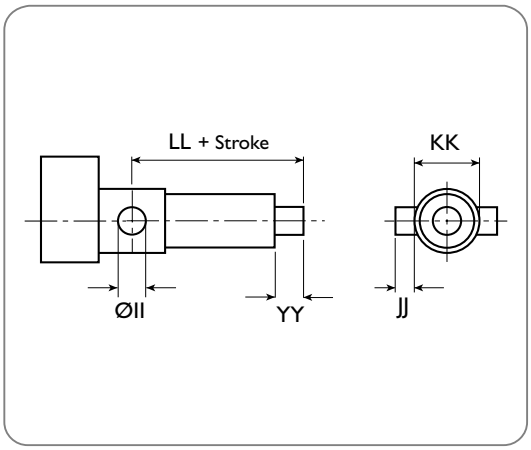

Trunnion Feet/End Cap Foot

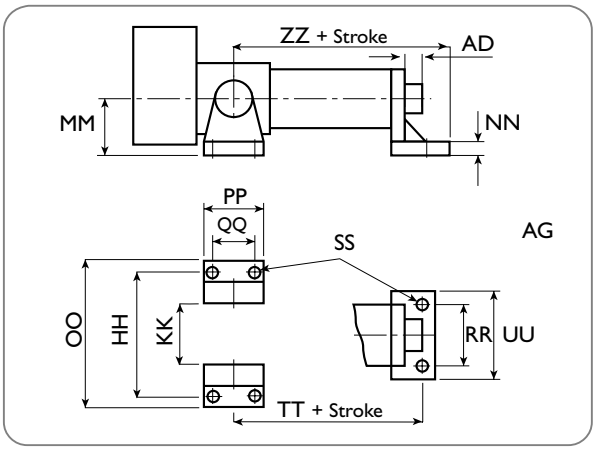

Size	075	100	125	150	175	225	250
ZØ (H7)	20	28	35	42	55	70	80
AA	23	32	38	47	62	78	90
BB	25	30	35	40	50	70	80
CCØ	105 (145)	130 (175)	170 (210)	220	270	300	330
DD	14	18	22	26	33	33	39
EE	4 x Ø13.5 x 80 PCD (115)	4 x Ø18 x 100 PCD (140)	4 x Ø22 x 130 PCD (165)	4 x Ø26 x 170 PCD	4 x Ø33 x 205 PCD	6 x Ø33 x 235 PCD	6 x Ø39 x 260 PCD
FF	M24 x 3	M36 x 4	M36 x 4	M48 x 5	M68 x 6	M80 x 6	M80 x 6
GG	35	40	50	60	75	90	125
HH	211	290	325	324	355	530	610
IIØ (F7)	35	45	60	70	95	110	125
JJ	32	45	50	60	80	90	105
KK	115	160	175	190	195	260	310
LL	300	305	363	495	750	850	750
MM	85	100	110	120	150	180	195
NN	14	20	25	35	40	45	50
OO	251	350	389	412	453	640	742
PP	100	140	154	238	308	350	400
QQ	60	80	90	150	210	240	268
RR	120	145	180	210	260	280	350
SS	6 x Ø13.5	6 x Ø22	6 x Ø26	6 x Ø33	6 x Ø39	6 x Ø45	6 x Ø52
TT	281	305	407	505	767	903	790
UU	160	205	250	300	370	410	500
VV	20	23	27	32	40	52	60
WW	28	37	45	54	72	90	105
XX	40	45	57	67	85	102	140
YY	50	41	24	50	58	32	60
ZZ	301	335	442	550	822	968	865
AC	20	28	35	45	55	70	80
AD	39	40.5	7.5	35	41	12	35
AG	70	90	85	110	135	155	180

Notes *1. Dimensions in brackets refer to Ball Screw Models.*

2.2.8. Rolaram® Accessories and Options

2.2.8.1. Limit Switches

2.2.8.1.1. Standard Rolaram® Actuator Limit Switch

- Inductive proximity switches
- Cylindrical design M18 x 1
- Standard housing made from brass or stainless steel.
- DC-voltage
- Sizes: A = 60 mm, B = 51.5 mm

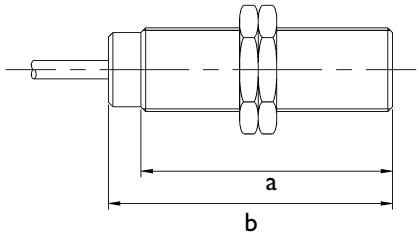

2.2.8.1.2. Rolaram® Limit Switch Technical Data

Parameter	Data
Type	Four-wire PNP/NPN/NO/NC programmable
Housing Material	Brass housing
Nominal Sensing Distance, S_n	5mm
Weight (kg)	0.120
Connecting Cable	4 core x 0.34 mm^2, 2m long (other lengths available on request)
Degree of Protection	IP 68
Sensing Distance, S_r	0 → 4mm
Repeat Accuracy, R	3% of S_r
Diffential Travel, H	1 → 15% of S_r
Operating Temperature	-25 → +80° C
Output State Indicator	LED
Voltage, U_o	12 → 24 VDC
Operating Voltage, U_b (including residual ripple)	10 → 38 VDC
Switching Power, I	0 → 200 mA, including overload and short circuit connection
Voltage Drop, U_d (output controlled)	2.6 V
Residual Current, I_r (output locked)	-
Idle Current, I_a	10 mA
Maximum Switching Frequency, f	2000 Hz
Delay Times	Stand-by delay t_v = 5ms, Switch-on time t_{on} = 1.15 ms, Switch-off time t_{off} = 0.35 ms

2.2.8.1.3. Optional Rolaram® Actuator Limit Switch

Other limit switches can be supplied to suit most applications e.g.

- Different sizes, shape, design and enclosure electro-mechanical limit switches.
- Inductive proximity sensor (refer section 8.2.1.).
- Hazardous Area rated electro-mechanical limit switch.
- High or low temperature rated limit switches or sensors.

For all of these options consult Power Jacks for details.

2.2.8.2 Encoders for Rolaram® Actuators

Encoders for Rolaram linear actuators can be provided fitted to the rear of the electric motor (beneath the cowling). The encoder specification is in general similar to that shown in section 8.3. For further details please consult Power Jacks.

2.2.8.3 Optional Materials for Rolaram® Actuator Construction

As with all other Power Jacks products these actuators can be manufactured with alternative materials to meet the most demanding application. Consult Power Jacks for advice.

2.2.9. Special Rolaram® Designs and Applications

Actuator R150 model, roller screw version, in-line drive.

Application Driving reciprocating, double acting paint pumps in the first all-electric paint mix facility in Europe.

Linear Actuation Requirements The dynamic load is 17.9 kN in both directions, at a linear speed of 3 metres/minute and a continuous duty cycle of 24 hours/day, 365 days/year. Each pump delivers 40 litres of paint/minute at 12 bar, 12 cycles/minute. The paint shop output is 30 cars/hour (Phase 1) and 60 cars/hour (Phase 2).

Solution Each pump is driven by a special R150 Rolaram actuator and a total of 31 actuator and pump systems are installed.

The actuator's features are:

- In-line configuration, minimizing the installation footprint.
- Completely sealed unit, ensuring no contamination of the pumped medium.
- Intrinsically safe, eliminating explosion risk.
- Fitted with a keyed screw mechanism.

An electro mechanical solution was preferred to pneumatics/hydraulics due to significantly reduced running costs, high life and reliability, high efficiency, low maintenance, low paint degradation and quiet operation.

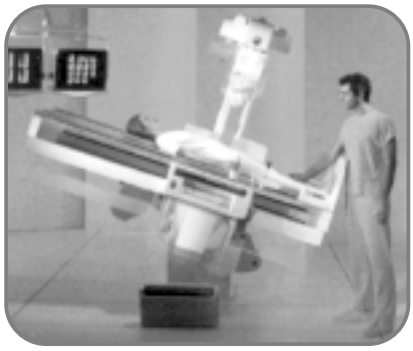

Actuator B100 model, ball screw version, parallel drive.

Application Full body, multi purpose X ray examination table.

Linear Actuation Requirements The dynamic load is 65 kN and high positional accuracy is required to achieve a defined axial play of the ram. Due to the clinical environment, the ability to tilt and elevate at the same time is unique and no other table on the marketplace is available with this feature. Operating in a medical environment, a major requirement of the actuators is low noise and the units cannot exceed 60 dB.

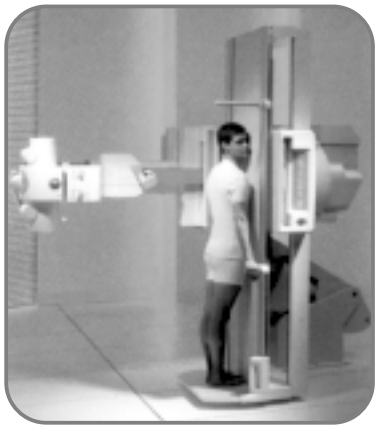

Solution Two B100 ball screw Rolaram actuators, both parallel drive configurations, are fitted on each X ray table and they are synchronized for horizontal and vertical positioning through a complex servo control system. The actuators are tested to withstand 8 times the maximum load, without catastrophic failure. Due to space constraints, they are of a compact design and conform to strict aesthetic criteria.

Actuator Spring return actuator, ball screw version, in-line drive.

Application Failsafe operation of ventilation dampers.

Linear Actuation Requirements The actuator opens and closes the damper and maintains a 3 kN load to ensure that the damper is sealed. The damper must open and close in 2 seconds and operate at 250°C for 1 hour. In the event of power failure, the actuator must failsafe in the closed position.

Solution One off ball screw actuator is fitted onto each damper. The actuator contains a pre-loaded spring and is fitted with a high temperature brake motor. The internal spring and drive configuration will allow the ram to retract automatically in the event of power failure. Three adjustable limit switch positions are provided and the stroke can be set within the allowable 120 mm, by adjusting these switches. All components are selected for the appropriate approved temperature requirement. The actuator has a fire test certificate for operation at 250°C for 1 hour.

Actuator R175 model, roller screw version, right angle drive.

Application Positioning a weir gate for water level adjustment.

Linear Actuation Requirements The actuator moves a dynamic load of 150 kN (static load of 330 kN), at a linear speed of 240 mm/minute, has a stroke of 2700 mm and a life requirement of 40 years.

Solution One actuator is fitted on each weir gate and has several special features

- Universal joint at the ram end to compensate for misalignment and to resist the load torque.
- Geared motor drive with hand wind facility.
- Positional indication and end of travel limit switches.
- Non contaminating grease.

This application is in a remote location and an electro mechanical solution was preferred over hydraulics due to low power requirements, no expensive hydraulic power pack, no hydraulic fluid leakage i.e. no water contamination and minimal maintenance.

2.2.10. Rolaram® Actuator Installation and Maintenance Tips

2.2.10.1. Mounting

There are two possible ways of mounting the Rolaram actuator at the gearbox end. By means of bearing journals for trunnion mounting or clevis mount.

2.2.10.1.1. Rear Clevis

- Mount the actuator by attaching the desired bracket and pin to the clevis end.
- Verify that the ram attachment is aligned throughout the actuator stroke before connecting the ram. The ram attachment will either be pinned or bolted in place depending on chosen model.

2.2.10.1.2. Trunnion Mount

- Mount the actuator by attaching the desired bearings (or mounting feet) to the trunnion pins.
- Verify that the ram attachment is aligned throughout the actuator stroke before connecting the ram. The ram attachment will either be pinned or bolted in place depending on chosen model.

Important Note: *Always ensure that clevis holes align correctly and that they allow for the correct angle of pivoting for the application before operating the actuator.*

Important Note: *Side loads on the actuator ram should be avoided by ensuring that the load is guided. The load guide mechanism should resist the torque developed at the ram by the screw mechanism. A guided ram can be supplied on request, which utilises a keyway in the inner ram, eliminates the need for torsional restraint and therefore allows flexibility in the choice of end fitting.*

The desired mounting orientation will be determined when placing the order; this orientation must be maintained at installation.

2.2.10.2. Lubrication of Rolaram® Actuator

2.2.10.2.1. Lubrication of the Lifting Nut

Lubricate the SPIRACON-nut or ball-nut assembly and the bearing housing by the corresponding lubricating points.

With the SPIRACON-nut or ball-nut assembly in the correct position, the lubrication point is accessible through the access plug on the outer tube.

Lubrication interval:	Every 6 months	
Standard grease type:	Lifting-nut assembly:	ROCOL MTS 1000
	Bearing housing:	Mobilgrease HP 222

Important Note: *The SPIRACON-nut assembly may only be readjusted by Power Jacks.*

2.2.10.2.2. Lubrication of the Gearbox

Inspection interval:	The oil level of the gear-box must be checked every 3 months and, if necessary, oil must be topped up.
Oil change interval:	After two years or 10,000 operating hours.
Standard oil:	Mineral oil Shell OMALA 220.

POWER JACKS
manufacturers of precision screw jacks, actuators and gearboxes
Group

Planetary Roller Screw

High dynamic load capacity up to 1200 kN

High efficiency

High positional accuracy

Long life

Low maintenance

Low noise

3. spiracon™ **roller screws**

Contents

3.1. Spiracon™ Roller Screw

3.1.1. Spiracon™ Roller Screw Overview

Spiracon™ is a planetary roller screw, which converts rotary motion to linear movement. It is a unique concept, invented and patented by Illinois Tool Works, USA, and developed by and licensed solely to Power Jacks Ltd.

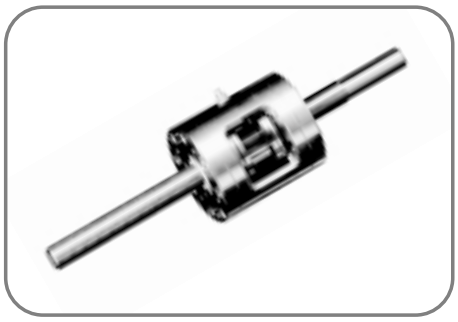

Principle of Operation

The Spiracon™ system consists of a multi-start screw with an involute thread form and a number of planetary rollers with annular grooves, which engage with the screw. These rollers also engage with a grooved load bearing element, which transmits the load through roller thrust bearings, to the nut housing. The rolling action results in a high efficiency mechanism, while the line contact and hardened and ground construction achieves a high dynamic load carrying capacity, together with almost no axial backlash or wear.

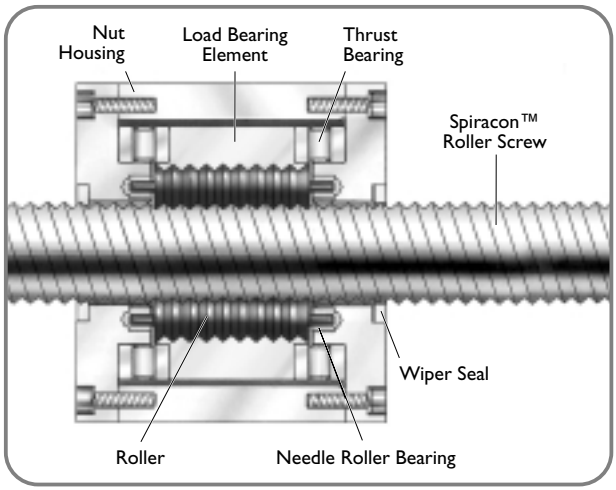

Main Features of Spiracon™ Roller Screws

- High dynamic load capacity
- High efficiency
- High positional accuracy
- Long life and low maintenance
- Same nut fits both right and left handed screws
- Hardened and ground rolling elements
- Clean operation
- Low noise.

Advantage over Ball Screws

- Higher dynamic load capacity
- Larger diameters and higher leads
- Higher positional accuracy
- Longer life
- Higher stiffness
- Higher speed and acceleration
- Low temperature operation
- Lower noise
- Nut easily removed with rollers retained
- Higher safety.

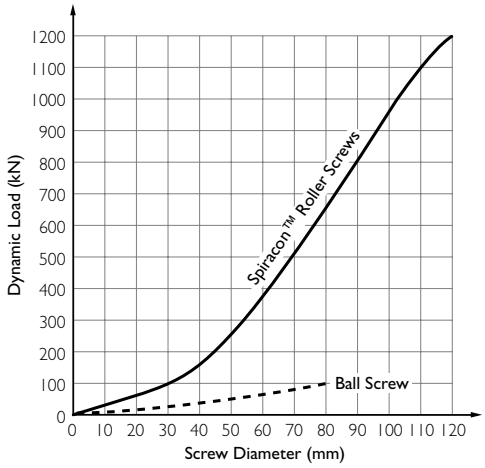

Applications for Spiracon™ Roller Screws

Spiracon™ roller screws are well proven throughout the world in a wide variety of industries including:

- Nuclear
- Aerospace
- Metal processing
- Medical
- Automotive
- Food Processing
- Paper
- Offshore and marine
- Communications
- Defence

Typical applications include:

- Robotics
- Laser tracking
- Indexing/adjusting
- Simulators
- Seismic testing
- Shield door adjustment
- Machine Tools
- Antenna dish adjustment
- Clamping mechanisms
- Medical scanners
- Continuous casting . . .

3.1.2. Applications for Spiracon™ Roller Screws

Application Anti-sway mechanism on ship-to-shore container cranes in Hong Kong.

Linear Actuation Requirements All 4 screws and nuts required to be synchronised. High loads and an aggressive marine environment were also factors.

Solution Four model 65 mm Spiracon™ roller screws (2 left hand and 2 right hand) with associated bevel gearboxes, couplings and shafting, per crane.

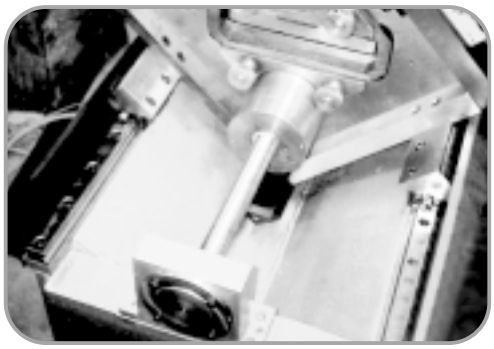

Application Flying shear for cutting to length pre-formed steel sheets.

Linear Actuation Requirements The shear required to be operated continuously and accurate repeatability of positioning was important. Long life and low maintenance were necessary.

Solution Model 55 mm Spiracon™ roller screw operating on a continuous reversal basis.

Application Clamping machine for reclamation of steel rolls.

Linear Actuation Requirements High dynamic load requirement, reliability of operation and a demanding operating environment.

Solution Model 75 mm Spiracon™ roller screw operating a vertical clamp, to hold steel rolls in position.

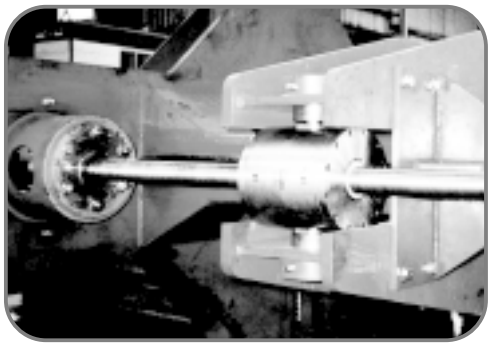

Application Road bridge inspection and maintenance platforms.

Linear Actuation Requirements Safety was the overriding requirement, as human cargo was involved. The units would be subjected to high load requirements and hostile weather conditions.

Solution Two 15 tonne platforms, raised and lowered by model 75 mm Spiracon™ roller screws, fitted with disk brakes and mechanical stops as safety features.

3.1.3. Spiracon™ Roller Screw Product Code

The product code is of the following form:

(1)				(2)				(3)			(4)		(5)			(6)					(7)					(8)		(9)
			-				-			-		-			-					-					-			

(1) Product
- SPT - Spiracon™ Screw and Nut.
- SPS - Spiracon™ Screw only.
- SPM - Spiracon™ Nut only.

(2) Model
A 3 figure code taken from the Technical Chart (Refer 3.1.6.).

(3) Lead
A 2 figure code taken from the Technical Chart (Refer 3.1.6.).

(4) Pitch
A 1 figure code taken from the Technical Chart (Refer 3.1.6.).

(5) Direction of Thread
- RH - Right Hand
- LH - Left Hand.

(6) Overall Screw Length
A 4 figure code to represent the overall screw length in mm.

(7) Screw Threaded Length
A 4 figure code to represent the threaded length of the screw in mm ie stroke (travel) + B (nut length) + overtravel at each end.

(8) Number of Siracon™ Nuts
A 1 figure code to represent the number of nuts required.

(9) Nut Mounting Holes
- O - Standard Mounting Holes
- S - To Customer Drawing

Example Part Number

(1)				(2)				(3)			(4)		(5)			(6)					(7)					(8)		(9)
S	P	T	-	0	6	5	-	3	6	-	6	-	R	H	-	1	5	4	0	-	1	4	5	0	-	1	-	0

(1) Spiracon™ Screw and Nut
(2) Model 65
(3) 36 mm Lead
(4) 6 mm Pitch
(5) Right Hand Thread
(6) 1540 mm Overall Screw Length
(7) 1450 mm Screw Threaded Length
(8) 1 Spiracon™ Nut
(9) Standard Nut Mounting Holes

Notes:
1. *In all cases, the customer should supply a detailed drawing, indicating the screw end matching details.*
2. *The above part number defines a standard catalogue unit. Where a standard unit does not meet the customer's requirement, Power Jacks will be pleased to design a special unit.*
3. *All goods are sold subject to our Standard Conditions of Sale, a copy of which is available upon request.*

3.1.4. Spiracon™ Roller Screw Range

There are 10 standard Spiracon™ roller screw models, with diameters from 15 mm to 120 mm, each with a choice of 3 leads. Dynamic load capacities of over 1000 kN (100 tonnes) and linear speeds of over 30 m/min are possible.

Where the standard range does not meet the application specification, special roller screws can be designed to meet customers' specific requirements (see Specials section below).

3.1.4.1. Efficiency

The Spiracon™ roller screw has an efficiency of typically 85%. Power consumption is therefore minimised, and a compact screw system is possible. Such a high efficiency means that the screw is not self-sustaining, and a braking system is needed to prevent back driving.

3.1.4.2. Tolerancing

The highly accurate machining and assembly of each roller screw means total axial play of less than 0.01mm can be achieved. The cumulative pitch error in the screw is typically less than 0.005 mm per 300 mm. Combined with a high stiffness, this means that accurate and repeatable positioning is possible. The screw straightness is within 0.1 : 1000.

3.1.4.3. Operating Life

Operating life is dependent upon the dynamic load. The maximum dynamic loads shown in the Technical Chart (Refer 3.1.6.) are equivalent to 1000000 revolutions of the screw. To determine actual operating life, please refer to "How to select a Spiracon™ Roller Screw" in Section 3.1.5. Where severe operating conditions exist, please consult our Technical Sales Department.

3.1.4.4. Guiding the Load

Loads should be guided, to remove any possible side load from the Spiracon™ nut. The guide system will also resist the torque developed by the roller screw mechanism.

3.1.4.5. Mounting

The Spiracon™ nut can be mounted using the standard mounting holes and location diameter. Screw end machining to suit thrust bearings is provided, or this can be specified to suit customer requirements. Mounting for operation in any orientation is possible.

3.1.4.6. Screw Length

The screw length is determined by the load and speed conditions (please refer to Step 2 of How to Select a Spiracon™ Roller Screw, Section 3.1.5.). For total screw lengths greater than shown in the table right, please consult our Technical Sales Department.

Screw Diameter	Maximum Length
Up to 20 mm	2 metres
30 mm to 90 mm	6 metres
120 mm	3 metres

3.1.4.7. Operating Environment

All units are constructed and finished to suit industrial operating conditions. Normal operating temperatures are from -10°C to +50°C. However, Power Jacks products have been proven in very low operating temperatures (-30°C - Arctic) and in higher temperatures (+70°C - steelworks). Wiper seals prevent the entry of large particles into the nut mechanism, and bellows can be provided to protect the screw. Please contact our Technical Sales Department to discuss hostile or hazardous operating environments.

3.1.4.8. Lubrication and Maintenance

Spiracon™ roller screws require only a minimum of maintenance during the normal operating life. Depending upon the duty, periodic lubrication should be carried out using Rocol MTS 1000 grease, through the nipple provided.

3.1.4.9. Specials

Spiracon™ can be offered to suit "special" applications, requiring for example:

- Special screw diameters or leads.
- Left hand screw threads.
- Very high dynamic load (over 1000 kN).
- Special materials e.g stainless steel.
- Temperature extremes or hazardous environments.
- Special screw end machining or nut mounting e.g. trunnions.

3.1.5. How to Select a Spiracon™ Roller Screw

There are 3 simple steps as follows :

Step 1 Load, Speed and Life

From the Technical Chart in Section 3.1.6., make an initial selection of a Spiracon model to suit the required maximum dynamic and static loads.

Model	Lead	Pitch	Dynamic C (kN)	Static Co (kN)	NUT AØ	B	CØ H6	D
15	6	1	45	68	92	90	34	4
	12	2	35	52	92	90	34	4
20	6	1	58	87	103	110	45	4
	12	2	58	87	103	110	45	4
	18	3	50	74	103	110	45	4

Full table in 3.1.6.

Choose a screw lead and calculate the rotational speed to suit the required linear speed:

$$\text{Rotational speed} = \frac{\text{Linear speed (mm/minute)}}{\text{Screw lead (mm)}}$$

Check that the rotational speed is below the maximum speed shown in the Technical Chart for the model selected.

Calculate the total number of revolutions of the screw for the operating life required:

Required no. of screw revs. = Life (hours) x Rotational speed (rpm) x 60

Check the operating life for the selected Spiracon model:

C = Dynamic capacity (kN) from Technical Chart
F = Application dynamic load (kN) (or Fm, mean load as below)

$$\text{Actual no. of screw revs.} = \left(\frac{C}{F}\right)^{3.33} \times 10^{6}$$

$$\therefore \text{Actual life in hours} = \frac{\text{No. of screw revs.}}{\text{Rotational speed} \times 60}$$

If required, reiterate the calculation to achieve the required life.

Where the dynamic load varies, the mean load (Fm) can be approximated as follows:

$$Fm = \sqrt[3]{\frac{(F1^3 \times U1) + (F2^3 \times U2) + \ldots}{U}}$$

F1, F2 = constant loads during U1, U2 revolutions

U = total number of revolutions

Where the dynamic load varies between a minimum (Fmin) and maximum (Fmax) the mean load is :

$$Fm = \frac{Fmin + 2 \times Fmax}{3}$$

Step 2 Critical Speed, Buckling and Deflection

Establish length (L) based on the required stroke and bearing support conditions. For length (L), check that the rotational speed is below the critical speed limit, given by the formula:

$$\text{Critical speed limit (rpm)} = \frac{10^7 \times f1 \times J}{L^2}$$

Where f1, f2 and f3 are defined by the bearing support conditions shown in the diagram overleaf, and J is the root diameter of the Spiracon™ thread given in the Technical Chart in section 3.1.6.

Where the screw is under a compression load, check that the chosen screw diameter and length (L) are within the load limit for buckling, given by the formula:

$$\text{Load limit (N)} = \frac{10^4 \times f2 \times J^4}{L^2}$$

For long horizontal screws, check the deflection of the screw under its own weight:

$$\text{Deflection (mm)} = \frac{6 \times 10^{-9} \times L^4}{f3 \times J^2}$$

Bearing Support Conditions

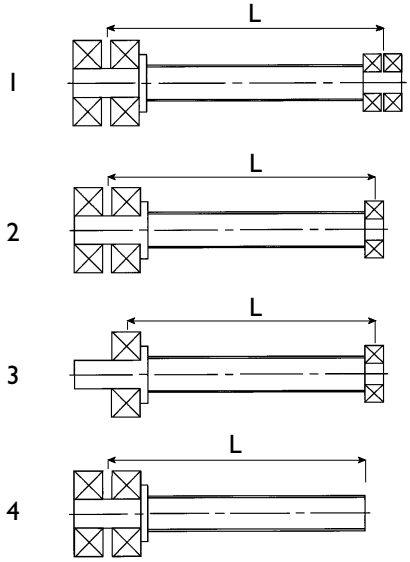

f1	f2	f3
21	12.5	384
15	6.5	185
9.5	3	77
3.4	0.8	8

Step 3 Torque and Power

Calculate the torque required to drive the screw:

$$\text{Torque (Nm)} = \frac{\text{Dynamic load (N)} \times \text{Lead (mm)}}{2000 \times \pi \times \text{Efficiency (0.85)}} \qquad \text{Power (kW)} = \frac{\text{Torque (Nm)} \times \text{Rotational speed (rpm)}}{9550}$$

Note: *Where there is a high acceleration or inertia, please consult out Technical Sales Department.*

3.1.5. How to Select a Spiracon™ Roller Screw

Example

Select a standard right hand Spiracon screw and nut for the following:

Dynamic load	=	220 kN (in compression)
Linear speed	=	900 mm/minute
Required life	=	2000 hours
Required stroke	=	1200 mm
Overall screw length	=	1850 mm
Screw mounting	=	Vertical
Bearing support condition	=	2

Step 1

From the chart in section 3.1.6., make initial selection of: Model 65 x 36 lead

Select a lead of 36mm to give a rotational speed of: $\frac{900}{36} = 25$ rpm (OK<1700 rpm)

Calculate the number of revolutions of the screw to give the required life: Required no. of screw revs. $= 2000 \times 25 \times 60 = 3 \times 10^6$

Check the operating life for selected Spiracon model:

Actual no. of screw revs. $= \frac{310^{3.33}}{220} \times 10^6$

$= 3.14 \times 10^6$ (OK>3×10^6)

∴ Actual life in hours $= \frac{3.14 \times 10^6}{25 \times 60} = 2093$ hours

(OK>2000 hours)

Step 2

Stroke	=	1200 mm
Length (L)	=	1600 mm (refer bearing support condition)

Check the critical speed limit:

Speed limit (rpm) $= \frac{10^7 \times 10 \times 63.7}{1600^2}$

$= 2488$ rpm (OK>25 rpm)

Check for buckling of the screw:

Load limit (N) $= \frac{10^4 \times 6.5 \times 63.7^4}{1600^2}$

$= 418$ kN (OK>220 kN)

Step 3

The torque and power are:

Torque (Nm) $= \frac{220000 \times 36}{2000 \times \pi \times 0.85} = 1483$ Nm

Power (kW) $= \frac{1483 \times 25}{9550} = 3.88$ kW

∴ *The complete product code is SPT-065-36-6-RH-1850-1500-1-0 (refer 3.1.3. for full breakdown of this code)*

3.1.6. Spiracon™ Roller Screw Technical Data and Dimensions

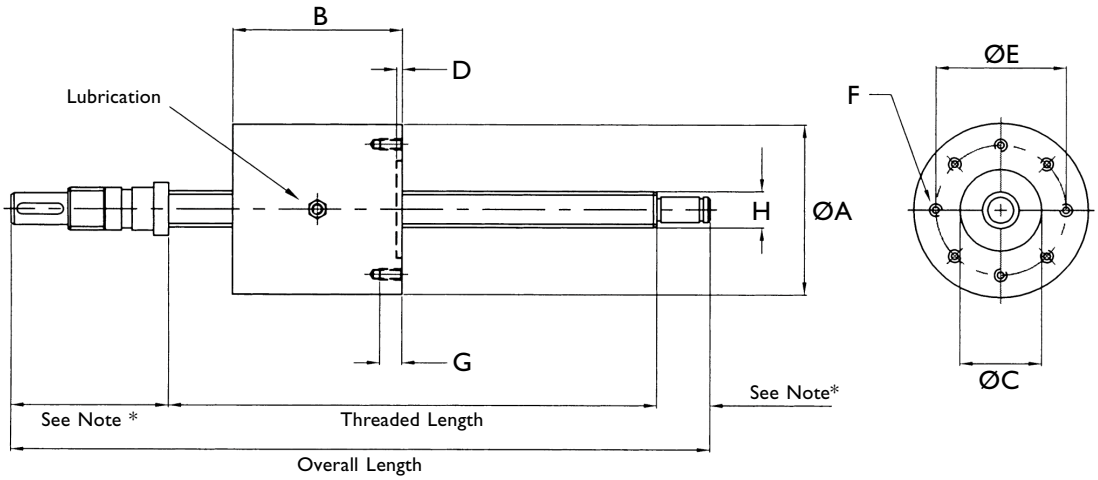

Note: * = *Customer to define at time of ordering.*
ØJ = *Root diameter of Roller screw*

Technical Dimensional Chart

(all dimensions are in millimetres)

					NUT							SCREW			WEIGHTS	
Model	Lead	Pitch	Dynamic C (kN)	Static Co (kN)	AØ	B	CØ H6	D	E PCD	F Dia x No	G	HØ	JØ min	Max Speed (rpm)	Nut (kg)	Screw per 100 mm (kg)
15	6	1	45	68	92	90	34	4	55	M8 X 6	12	17	15.3	5500	3.5	0.18
	12	2	35	52	92	90	34	4	55	M8 X 6	12	17	15.3	5500	3.5	0.18
20	6	1	58	87	103	110	45	4	58	M8 X 8	12	21	18.4	4900	5.5	0.27
	12	2	58	87	103	110	45	4	58	M8 X 8	12	21	18.4	4900	5.5	0.27
	18	3	50	74	103	110	45	4	58	M8 X 8	12	21	18.4	4900	5.5	0.27
30	6	1	100	150	125	130	50	4	70	M10 X 8	15	30.8	28.2	4300	9.3	0.55
	18	3	90	120	125	130	50	4	70	M10 X 8	15	30.8	28.2	4300	9.3	0.55
	24	3	105	150	125	130	50	4	70	M10 X 8	15	30.8	28.2	4300	9.3	0.55
40	12	2	120	180	135	135	65	4	83	M12 X 8	18	39	35.5	3300	11.0	0.92
	24	3	128	192	135	135	65	4	83	M12 X 8	18	39	35.5	3300	11.0	0.92
	32	4	115	172	135	135	65	4	83	M12 X 8	18	39	35.5	3300	11.0	0.92
45	12	2	190	285	170	180	75	5	105	M16 X 8	24	46.6	41.3	2600	23.2	1.3
	24	4	170	255	170	180	75	5	105	M16 X 8	24	46.6	41.3	2600	23.2	1.3
	48	6	120	180	170	180	75	5	105	M16 X 8	24	46.6	41.3	2600	23.2	1.3
55	12	2	290	435	205	229	85	5	128	M20 X 8	30	56.1	50.9	2100	44.0	1.92
	24	4	270	405	205	229	85	5	128	M20 X 8	30	56.1	50.9	2100	44.0	1.92
	48	6	275	410	205	229	85	5	128	M20 X 8	30	56.1	50.9	2100	44.0	1.92
65	24	4	340	500	240	250	95	5	150	M20 X 8	30	68.8	63.7	1700	66.50	2.83
	36	6	310	465	240	250	95	5	150	M20 X 8	30	68.8	63.7	1700	66.50	2.83
	54	6	310	455	240	250	95	5	150	M20 X 8	30	68.8	63.7	1700	66.50	2.83
75	24	4	380	570	275	260	105	6	165	M20 X 8	30	75.2	70.1	1600	87.4	3.45
	36	6	340	510	275	260	105	6	165	M20 X 8	30	75.2	70.1	1600	87.4	3.45
	54	6	340	510	275	260	105	6	165	M20 X 8	30	75.2	70.1	1600	87.4	3.45
90	24	4	530	795	315	310	120	8	200	M24 X 10	35	90	85	1200	137	4.96
	36	6	520	780	315	310	120	8	200	M24 X 10	35	90	85	1200	137	4.96
	54	6	615	920	315	310	120	8	200	M24 X 10	35	90	85	1200	137	4.96
120	24	4	950	425	420	400	150	8	250	M24 X 12	50	120	115	1000	310	8.82
	40	5	1200	1800	420	400	150	8	250	M24 X 12	50	120	115	1000	310	8.82
	54	6	1200	1800	420	400	150	8	250	M24 X 12	50	120	115	1000	310	8.82

Dimensions subject to change without notice.

NEETER DRIVE
SPIRAL BEVEL GEARBOXES

Section 4.1. - Bevel Gearboxes Range P

Compact 'Monobloc' Design
2-way, 3-way and 4-way
Solid Shaft and Hollow Shaft
Manual Disengage / Reversing Types
1:1, 2:1 and 3:1 gear ratios
Power Ratings: 0.1 → 7.35 kW
Torque Ratings: 1.5 Nm → 40 Nm

Section 4.2. - Bevel Gearboxes Range N

Ultra Compact Design
2-way, 3-way and 4-way
Solid Shaft and Hollow Shaft
Motor Adaptors
1:1, 2:1, 3.1 and 4:1 gear ratios
Power Ratings: 0.1 → 226 kW
Torque Ratings: 15 Nm → 3000Nm

4. bevel **gearboxes** (neeter drive)

Section 4.3. - Bevel Gearboxes Range BA

Cubic shape with universal mounting on all sides
2-way, 3-way and 4-way
Solid Shaft and Hollow Shaft
Motor Adaptors
1:1, 2:1, 3:1, 4:1, 5:1 and 6:1 gear ratios
Torque Ratings: 10 Nm → 9000 Nm

Section 4.4. - Bevel Gearboxes Range Power Gear

More than 100% more performance for construction sizes
Compact cubic design mounting holes on all sides
2-way, 3-way and 4-way
Solid Shaft and Hollow Shaft
Motor Adaptors
1:1, 2:1, 3:1, 4:1 and 5:1 gear ratios
Torque Ratings: 25 Nm → 5200 Nm

Contents

NEETER DRIVE
SPIRAL BEVEL GEARBOXES

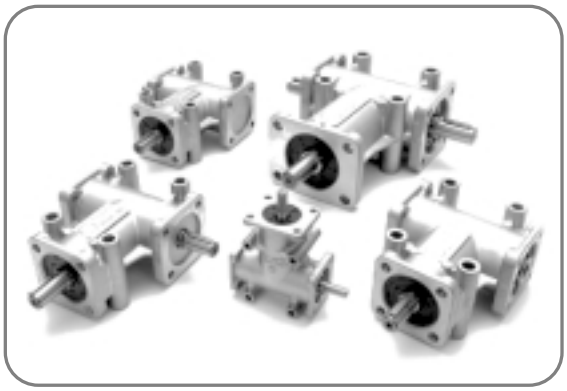

4.1. Bevel Gearboxes - Neeter Drive - Range - P

4.1.1. Neeter Drive - Range - P - Design Overview

4.1.1.1. General Design Feature Housing

A compact "monobloc" design provides a visually attractive, quality finished, casing, produced from die-casting, in lightweight, aluminium alloy. Several alternative fixing options are provided each via 4 fixing holes, as well as, through 4 holes in integrally cast, small base-mounting bosses, on widely-spaced centres - for more stable mounting, to top or bottom thereby offering universal and exceptionally firm attachment facilities.

4.1.1.2. Bevel Gears

The GLEASON spiral bevel gears, of case-hardened alloy steel, provide an advancing, simultaneous mesh across several adjacent teeth, thereby ensuring smooth, evenly distributed, high load transmission, which is enhanced by, bi-directional, "running-in", in pairs.

4.1.1.3. Shafts

Shafts are of case-hardened and ground alloy-steel. Exceptions are: both, the smallest casting sizes, types 2000 & 2002 and types 2012 & 2028, where shafts are all of hardened and tempered, low alloy-steel. Bearings All shafts are carried by generously sized, high quality, deep groove, ball bearings of established make.

4.1.1.4. Design Speed and Life

Optimum performance, at continuous full rated power transmission, is based on an input-shaft design-speed of 1400 RPM. This provides an average, trouble-free, operating design-life of 10000 hours. However, where "ratio geared" units are used as speed "increasers", optimum performance, "input" design-speed is reduced to 500 RPM for the 1:3 ratios and, to 750 RPM for the 1:2 ratios. For all the types 4-way and 3-way independent shaft with a gear ratio different of 1:1, the input shaft is the shaft A (quickly), the shaft C (quickly) is the out shaft, the shafts B and D are slow.

4.1.1.5. Operating Temperature

Due to the compact "monobloc" design, operating case-temperature should be kept within the permissible limit of -18 °C to +80 °C (0°F to 170°F), to ensure trouble-free running.

4.1.1.6. Operating Noise

Close tolerance gear cutting and high accuracy assembly ensures extremely low operating noise levels, even at high running speeds.

4.1.1.7. Alignment Accuracy

Standard unit, final gear train assembly, angular clearances are held to within 15' - 30' of arc.

4.1.1.8. Lubrication

All units are supplied fully charged with oil. The 2000 series is lubricated with synthetic oil. The lubrication is a life one, they do not need replenishments or changes for the lifetime of the gear.

The above details are for series 2000 gearboxes. For 4000 gearbox details please consult Power Jacks.

For full catalogue with dimensions please consult Power Jacks.

4.1.2. Series P - 2000

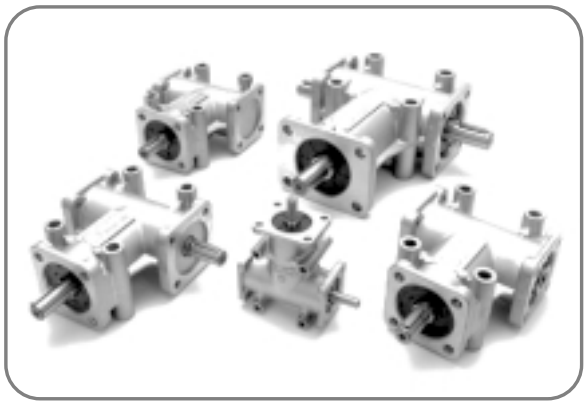

4-Hole flange mount, 2-way, 3-way and 4-way in solid and hollow shaft versions.

4.1.2.1. Gearbox Capacity Rating Performance Table

Type	Gear Ratio Option	Max input shaft "A" power at1400 rpm		Max output shaft torque in da Nm		
		kW	HP	B	C	D
2000	1:1	0.42	0.58	0.30	-	-
	1:2	0.10	0.14	0.15	-	-
2002	1:1	0.42	0.58	0.15	0.15	-
	1:2	0.10	0.14	0.08	0.08	-
2006	1:1	1.83	2.50	0.45	0.45	0.45
	1:2	0.50	0.68	0.25	0.25	0.25
	1:3	0.25	0.34	0.17	0.17	0.17
2007	1:1	1.83	2.50	0.90	0.45	-
	1:2	0.50	0.68	0.50	0.25	-
	1:3	0.25	0.34	0.35	0.17	-
2008	1:1	1.83	2.50	0.65	0.65	-
	1:2	0.50	0.68	0.35	0.35	-
	1:3	0.25	0.34	0.25	0.25	-
2011	1:1	1.83	2.50	1.30	-	-
	1:2	0.50	0.68	0.70	-	-
	1:3	0.25	0.34	0.50	-	-
2012	1:1	1.83	2.50	1.30	-	-
	1:2	0.50	0.68	0.70	-	-
	1:3	0.25	0.34	0.50	-	-
2025	1:1	7.35	10.00	3.50	1.80	-
	1:2	2.94	4.00	2.80	1.40	-
	1:3	1.47	2.00	1.80	0.90	-

Type	Gear Ratio Option	Max input shaft "A" power at 1400 rpm		Max output shaft torque in da Nm		
		kW	HP	B	C	D
2026	1:1	7.35	10.00	1.80	1.80	1.80
	1:2	2.94	4.00	1.40	1.40	1.40
	1:3	1.47	2.00	0.90	0.90	0.90
2027	1:1	7.35	10.00	1.66	1.66	1.66
2028	1:1	5.50	7.50	3.80	-	-
	1:2	1.83	2.50	2.50	-	-
	1:3	0.91	1.25	1.80	-	-
2030	1:1	5.50	7.50	3.80	-	-
	1:2	1.83	2.50	2.50	-	-
	1:3	0.91	1.25	1.80	-	-
2031	1:1	5.50	7.50	1.90	1.90	-
	1:2	1.83	2.50	1.25	1.25	-
	1:3	0.91	1.25	0.90	0.90	-
2032	1:1	7.35	10.00	5.00	-	-
	1:2	2.94	4.00	4.00	-	-
	1:3	1.47	2.00	2.80	-	-
2033	1:1	7.35	10.00	2.50	2.50	-
	1:2	2.94	4.00	2.00	2.00	-
	1:3	1.47	2.00	1.40	1.40	-

1 da Nm = 10 Nm = 1.02kgm

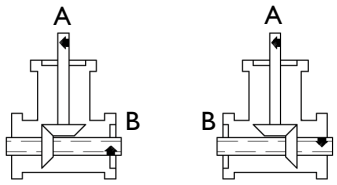

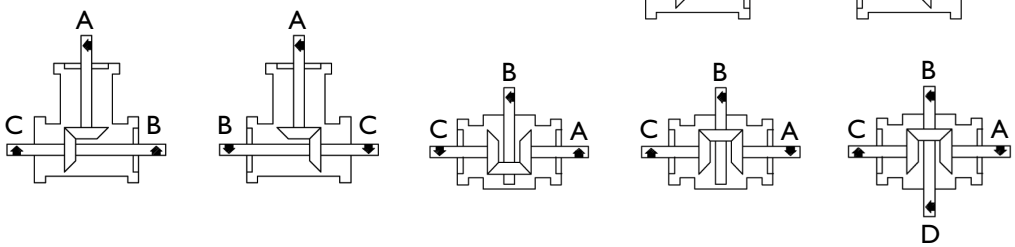

For full catalogue with dimensions please consult Power Jacks

4.1.3. Series P - 2000 - Manual Disengage/Reversing

4.1.3.1. Design Features

Generally comprising of the same basic design characteristics as the range of right angle gearboxes with the added facility, within the housing, for manual disconnection or "reversed rotation" re-engagement of the output drive shaft. This is effected by hand rotation of a control knob located on one side of the housing to provide 3 positive control positions. The control knob can engage with the power train of 3 straight bevel gears. "Central position": the drive output is fully disconnected allowing it to "idle" or "free-wheel". "Left position": engagement in one direction to provide forward output rotation. "Right position": engagement in the other direction to provide reverse output rotation.

Note: manual engagement & disengagement must ONLY be carried out when all shafts and, particularly, the output shafts are stationary (unless, both driving and driven inertias are small - and, even then, speeds should not exceed 200 RPM).

4.1.3.2. Gearbox Capacity Rating Performance Table

All Gear ratios = 1:1

Type	Max input shaft "A" power at 1400 rpm	Max output shaft torque in da Nm		
	kW	B	C	D
2019	2.25	3	1.55	-
2020	2.25	3	1.55	-
2023	2.25	3	0.755	0.755

1 da Nm = 10 Nm = 1.02 kgm

For full catalogue with dimensions please consult Power Jacks.

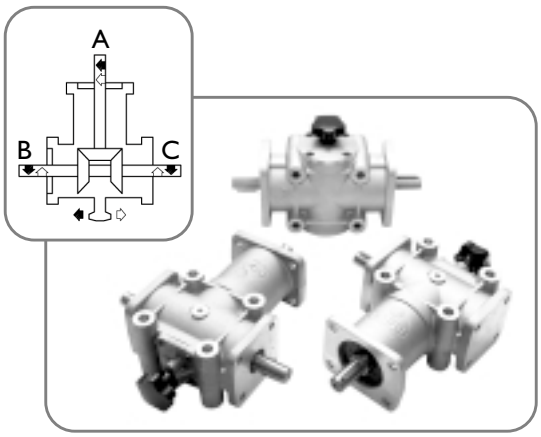

4.1.4. Series P - 4000

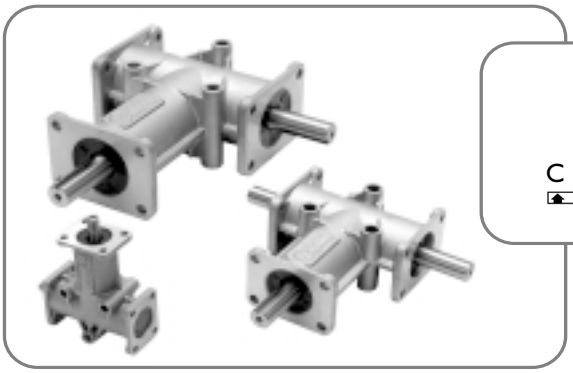

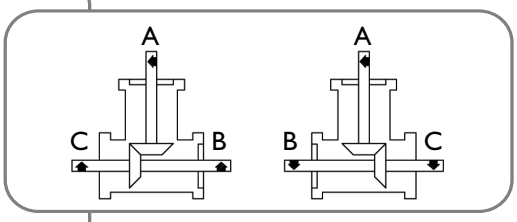

3-Hole flange mount, 2-way and 3-way in solid shaft versions.

4.1.4.1. Gearbox Capacity Rating Performance Table

Type	Gear Ratio Option	Max input shaft "A" power at 1400 rpm		Max output shaft torque in da Nm	
		kW	HP	B	C
4000	1:1	0.37	0.50	0.24	-
	1:2	0.15	0.20	0.20	-
4002	1:1	0.37	0.50	0.12	0.12
	1:2	0.15	0.20	0.10	0.10
4008	1:1	1.30	1.75	0.44	0.44
	1:2	0.50	0.70	0.34	0.34
4011	1:1	1.30	1.75	0.88	-
	1:2	0.50	0.70	0.68	-

1 da Nm = 10 Nm = 1.02kgm

Type	Gear Ratio Option	Max input shaft "A" power at 1400 rpm		Max output shaft torque in da Nm	
		kW	HP	B	D
4030	1:1	4.00	5.50	2.72	-
	1:2	1.50	2.00	2.00	-
4031	1:1	4.00	5.50	1.36	1.36
	1:2	1.50	2.00	1.00	1.00
4032	1:1	6.50	8.80	4.40	-
	1:2	3.00	4.08	4.09	-
4033	1:1	6.50	8.80	2.20	2.20
	1:2	3.00	4.08	2.04	2.04

For full catalogue with dimensions please consult Power Jacks

Contents

NEETER DRIVE
SPIRAL BEVEL GEARBOXES

4.1. Bevel Gearboxes - Neeter Drive - Range - N

4.2.1. Neeter Drive Spiral Bevel Gearbox Characteristics

Neeter Drive Series 35 - 40 Spiral Bevel Gearboxes

The NEETER DRIVE gearbox is an ultra compact unit and is available in 5 sizes and 5 gear ratios. The design employs a central bearing housing support on the 1:1 and 1.5:1 gear ratios, and a small extended bearing housing on the input side of the gearboxes with ratios 2:1 and above and hollow shaft output. It is a high torque rated unit with good thermal characteristics. It is available in solid shaft and hollow output shaft configurations and has the option of a motor mounting flange, for easy direct coupling of a standard electric motor.

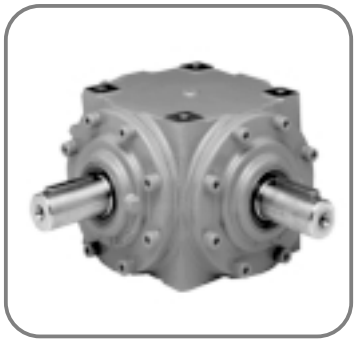

NEETER DRIVE
SPIRAL BEVEL GEARBOXES

4.2.1.1. Spiral Bevel Gearbox Characteristics

Housing: S.G. Iron to BS27789:1985, Grade 420/12.

Gears: All gears are made from alloy steel and case hardened.

Bearings: Pinion (input) and gear shaft (output) are fitted with twin taper roller bearings to provide almost unchanged backlash over a long life.

Sealing: All units are fitted with spring energised single lipped oil seals and all flanges are sealed by O-rings.

Lubrication: Lubrication is dependent upon the operating conditions, oil for higher speeds and semi fluid grease for medium and low speeds.

Note: All units are shipped dry from the factory and should be lubricated before use.

Service Life: Life of gears including mountings 10000 hours

Efficiency: Reduction ratio bevel gear units are approximately 95% - 98% efficient. Please consult Neeter Drive regarding increasing ratios.

Overhung Loads: All units are rated for in-line connection. If a unit is to be fitted with a belt pulley, chain sprocket etc., radial forces must be considered. If in doubt please consult Neeter Drive.

Note: Where operating conditions deviate from those described above please consult Neeter Drive.

4.2.2. How to Select a Neeter Drive Unit

4.2.2.1. Selecting a Unit

When selecting a gearbox, there are a number of factors which can influence the final size of unit selected. The information contained in the selections gearbox characteristics (4.2.1.) and Technical data (4.2.3.) provide details of these factors for use in the selection process.

The following Selection Procedure provides a step-by-step guide to gearbox selection for those not fully familiar with the procedures. An example has been used in the selection procedure to assist in following through the procedure.

Example

A gearbox is required for an Input Speed of 1000 rpm, an Output Speed of 500 rpm, an Output Torque of 150Nm and one Output Shaft. The Drive is by electric motor through a clutch mechanism and the gearbox is on the main drive of a heavy duty stacking machine. The machine operates for 10 hours per day, starts 8 times per hour and operates for 35 minutes in every hour, the other 25 minutes being taken up in loading the machine. The ambient temperature of the premises is 20°C.

Specified Information

1.	Gearbox Input Speed (rpm)	1. 1000
2.	Gearbox Output Speed (rpm)	2. 500
3.	Gearbox Configuration (refer Section 4.2.5.)	3. 2 Way (2)
4.	Required Output Torque (Nm)	4. 150
5.	Operating Hours per Day (refer Section 4.2.3.)	5. 10
6.	Input Power Source (refer shock load table)	6. Electric Motor
7.	Gearbox Application (refer shock load table)	7. Stacking Machine
8.	Number of Starts per Hour (refer Section 4.2.3.3.)	8. 8
9.	Transmission Methods (refer transmission mechanism, Section 4.2.3.5.)	9. Clutch
10.	Duty Cycle per Hour (% Running time)	10. 35/60 = 58%
11.	Operating Ambient Temperature (refer Thermal Limit, Section 4.2.3.6.)	11. 20° C

4.2.2.2. Selection of Design Factors

Step 1 Shock Load Factor (f_1) — **Step 1** 1.50

Using the Specified Information in Points 5, 6 and 7 above, select the Shock Load Factor from the Table in Section 4.2.3.2

Step 2 Starting Frequency Factor (f_2) — **Step 2** 1.00

Using the Specified Information in Point 8 above, select the Starting Frequency Factor from the Table in Section 4.2.3.3

Step 3 Transmission Load Factor (f_3) — **Step 3** 1.00

Using the Specified Information in Point 9 above, select the Transmission Load Factor from the Table in Section 4.2.3.4.

Step 4 Thermal Limit - Duty Cycle - Factor (f_4) — **Step 4** 1.25

Using the Specified Information in Point 10 above, select the Thermal Limit - Duty Cycle - Factor from the Table in Section 4.2.3.6.1.

Step 5 Thermal Limit- Ambient Temperature - Factor (f_5) — **Step 5** 1.00

Using the Specified Information in Point 11 above, select the Thermal Limit - Ambient Temperature - Factor from the Table in Section 4.2.3.6.2.

4.2.2.3. Calculated Data

Step 6 **Calculate the Gear Ratio = Input Speed ÷ Output Speed**

Note: *If the gear ratio does not correspond to one of the STANDARD ratios contained in this technical manual, one of the speeds, normally the output speed, must be changed to bring the ratio to standard. Non-standard ratios can be supplied, if required, but such special selections must be referred to Neeter Drive.*

Step 6 1000/500 = 2
Therefore 2:1 Reduction

Step 7 **Calculate the Corrected Output Torque = Required Output Torque x f_1 x f_2 x f_3**

Note: *Where there is more than one output shaft, the Required Output Torque for the gearbox is the summation of the individual Output Torques from the output shafts.*

Step 7 150 x 1.25 x 1.00 x 1.00 = 187.5 Nm

Step 8 **Calculate the Corrected Output Power = Required Output Torque x Output Speed ÷ 9550**

Step 8 (187.5 x 500) ÷ 9550 = 9.82 kW

Step 9 **Calculate the Input Power = Output Power ÷ Efficiency**
(Gearbox efficiency is between 95% and 98% after initial running in)

Step 9 9.82 ÷ 0.98 = 10.02 kW

4.2.2.4. Gearbox Selection

Step 10 **From the GEARBOX RATINGS TABLE, select the gearbox with the closest adequate rated Power.**

Step 10 From the Selection Table in Section 4.2.4., for Input Power 10.02 kW, gear ratio 2:1, Output Torque 315 Nm and Input Speed 1000 rpm, select Series 39.

Step 11 **When selecting a gearbox, the Thermal Capacity of the gearbox chosen must be considered. For the Limiting Thermal Capacity, expressed as a Power Rating, refer to Section 4.2.3.6.3. For the selected gearbox, calculate the Thermal Capacity = Limiting Thermal Capacity x f_4 x f_5.**

The Calculated Input Power must not exceed this Calculated Thermal Capacity. A larger gearbox must be selected if the Calculated Input Power is higher and a check run on the other parameters

Step 11 From the table in Section 4.2.3.6.3, Limiting Thermal Capacity for Series 39 is 49kW.

Calculate the gearbox,
Thermal Capacity = 49 x 1.25 x 1.00 = 73.5 kW

The Input Power is within this limit.
Selected gearbox is ok.

Step 12 **As a final check on the capacity of the chosen gearbox, the effect of the connected drive systems must be considered. The section headed Permissible Shaft Loading describes the calculation to be undertaken where the transmission mechanism can give rise to radial and/or axial forces on the gear shafts. This occurs, particularly, where chain and belt drives are employed.**

Step 12 Power transmission is by clutch. From the Transmission Load Factor table (refer Section 4.2.3.5), there are no additional loads to be considered and the selection of gearbox is acceptable.

4.2.3. Neeter Drive Technical Data

4.2.3.1. Capacity and Torque

Refers to the rated capacity and rated torque on the basis of the following nominal values:

- Shock-free operation
- Operating time per day = 8 hours
- Max. 20 starts per hour (torque x 1.5 permissible)
- Duty cycle 100%
- Life of gears including mountings 10000 hours
- When selecting gearboxes please take thermal capacity into consideration.
- Ambient temperature approx. 20° C (-10° to +50°C capacity into consideration permissible)

4.2.3.2. Shock Load Factor (f_1)

Shock Load Category		
I	II	III
Conveyor Belts	Heavy Duty Lifts	Punching Machine
Generators	Hoists	Shears
Ventilators	Mixers	Forging Presses
Light Textile Machinery	Cranes	Vibrators
Rotating Machine Tools	Heavy Duty Textile Machinery	Rolling Mills
	Woodworking Machinery	Extremely Heavy Lifts
	Paper Machinery	Heavy Duty Roller Conveyors

Shock Load Category	Input Power Source								
	Electric Motor			Piston Machine Hydro Motor			Single Cylinder Piston Machine		
	Operating Time per Day (hrs)			Operating Time per Day (hrs)			Operating Time per Day (hrs)		
	≤2	10	>10	≤2	10	>10	≤2	10	>10
I	0.9	1.00	1.25	1.00	1.25	1.50	1.25	1.50	1.75
II	1.00	1.25	1.50	1.25	1.50	1.75	1.50	1.75	2.00
III	1.50	1.50	1.75	1.75	2.00	2.25	2.00	2.25	2.50

4.2.3.3. Starting Frequency Factor (f_2)

up to	20 starts per hour	f_2 = 1.0
up to	60 starts per hour	f_2 = 1.1
up to	200 starts per hour	f_2 = 1.3
up to	600 starts per hour	f_2 = 1.5
more than	600 starts per hour	(on request)

4.2.3.4. Transmission Load Factor (f_3)

The total load on the drive shafts and their bearing is the result of:

a. The loads arising from the gear teeth

b. The axial and radial loads arising from the transmission mechanisms attached to the drive shafts. It is this load which must be considered when selection the gearbox and shaft sizes.

Depending upon the type of transmission mechanism used in connecting the gear shafts to the driving and driven loads, axial and / or radial loads can be applied to the gearbox shafts and their bearings. These loads can arise from:

either ***preload,*** due for example, to tension loading in belts
or ***dynamic forces,*** due for example, to out-of-balance in the transmission element or shock load, due for example, to snatching in a chain drive.

The following table gives the factors which should be used to correct the Output Torque when sizing the gearbox.

4.2.3.5. Transmission Load Factor (f_3)

Transmission Mechanism	Transmission Load Factor (f_3)	
	Preload	Dynamic
Clutches	-	1.00
Gears of all Types	-	1.00 → 1.25
Chains	1.00 → 1.25	1.25 → 1.50
Flat Belts	2.00 → 250	1.00 → 1.25
V-Belts, Toothed Belts	1.50 → 2.00	1.00 → 1.25

4.2.3.6. Thermal Limits

Due to the compact design of this range of spiral bevel gear units the ratings are controlled by the thermal capacity at some speeds. A maximum case temperature of 80°C is specified and temperatures in excess of this figure normally indicate either incorrect oil levels or too much power being handled by the unit. If this temperature is exceeded Neeter Drive should be consulted.

4.2.3.6.1. Thermal Limit - Duty Cycle - Factor (f_4)

Duty cycle per hour is the percentage of the time per hour during which the gearbox will be on-load.

Duty Cycle per Hour (%)	100	80	60	40	20
Thermal Limit Factor, f_4	1.00	1.25	1.50	1.75	2.00

4.2.3.6.2. Thermal Limit - Ambient Temperature - Factor (f_5)

Ambient Temperature °C	10	20	30	40	50
Thermal Limit Factor, f_5	1.20	1.00	0.87	0.75	0.62

4.2.3.6.3. Limiting Thermal Capacity

The capacity of some gears is limited by the maximum permissible temperature of the oil bath. The charts below show the limiting thermal capacities, which can be transferred without cooling at an ambient temperature of 20°C and duty cycle of 100% per hour.

Series	35	37	38	39	40
Power (kW)	3.3	9.0	20.5	49	90

WARNING: **The case temperature must not exceed 80°C, (see thermal limits).**

Neeter Drive should be consulted if a gear unit is to be installed with a shaft positioned vertically.

4.2.3.7. Interpreting Power Charts

Speeds other than those shown may be calculated easily by interpolating between next lower and next higher speeds shown. The ratings are based upon a 10000 hour life datum, (8-10) hours per day operation, uniform power source, free from recurrent shock loads) and must be adjusted by service factor from the factor tables if different.

4.2.3.8. Approximate Gear Box Weight

Weight (kg)	2 Way 1:1 & 1.5:1 Ratio	3 Way 1:1 & 1.5:1 Ratio	2 Way 2:1 & Above	3 Way 2:1 & Above
Series 35	4.5	4.75	6.5	6.75
Series 37	10.5	11	12	12.5
Series 38	20	20.5	23	23.5
Series 39	38	46.5	45	53
Series 40	112	116	126.5	131

4.2.3.9. Permissible Shaft Loading

After selecting the gearbox for the required duty it is necessary to check that the axial and radial loading arising from the transmission mechanism is acceptable for the gear shaft diameters on the selected gearbox (gear shaft diameters are given on the Dimensions page for the chosen design).

The bearing configuration on the shafting, the shaft diameter and the shaft speed determine the permissible external loading which can be carried by the shaft without bearing or shaft failure. The graph showing permissible radial forces on shafts has been drawn for a typical Output Shaft. In this arrangement the bearing centres are mounted at either end of the through shaft and there is a significant span which allows higher radial loads to be accepted, see sketch below. For typical Input Shafts and Output Shafts, which are overhung from the gearbox face, the bearing centres are closer together and the radial load carrying capacity is reduced, see sketch below.

To calculate the Permissible Loading on the gearbox shafts, use the gearbox output and input speeds and diameters respectively.

1. Read off the Permissible radial Force for the nearest diameter shafts from the graph below.
2. Use the Correction Factors, below, to calculate the Permissible Radial and Axial Loads for each of the gearbox shafts.

4.2.3.10. Correction Factors

	Output Shaft (Bearings on through shaft)	Input Shaft (Bearings on overhung shaft)	Output Shaft (Bearings on overhung shaft)	Gearboxes with Centrebearing
Permissible Radical Forces	1.00	0.66	0.66	0.40
Permissible Axial Forces	0.50	0.50	0.50	0.50

The calculated loads should be checked against the radial and axial loads provided by the manufacturer of the transmission mechanism. If the loading created by the transmission mechanism exceeds the permissible level, a gearbox with a larger diameter shaft is required. At this point Neeter Drive should be consulted as it is often possible to fit a special shaft arrangement into a standard gearbox.

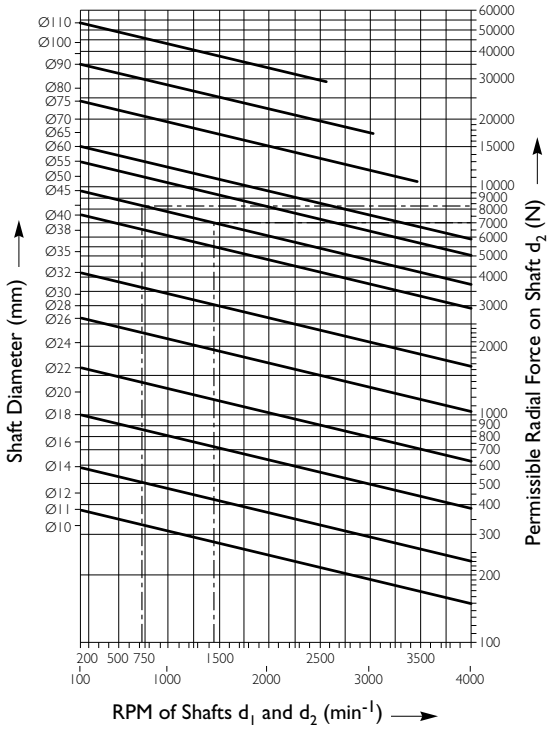

Permissible Shaft Loading Curves

Permissible Shaft Loading Curves

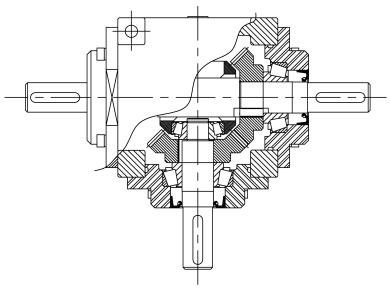

Ratios 1:1 & 1.5:1

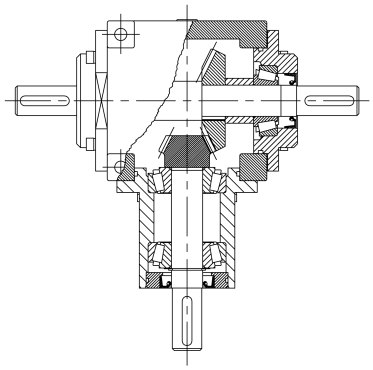

Ratios 2:1 & above

Example Series 39, ratio 2:1

Shaft diameter = 48 mm, nearest tabulated diameter = 45 mm

$Ød_1$ = 45 (48) permissible transverse force 7000 N x 0.66 = 4620 N
permissible axial force 4620 N x 0.50 = 2310 N

$Ød_2$ = 45 (48) permissible transverse force 8400 N x 1.00 = 8400 N
permissible axial force 8400 N x 0.50 = 4200 N

4.2.4. Neeter Drive Gearbox Power Ratings

Power Ratings

Gear Unit	Ratio	Power Ratings at given Input Speeds (rev min^{-1})																					
		10		50		100		250		500		750		1000		1500		2000		2500		3000	
		kW	Nm	kW	Nm	kW	Nm	kW	Nm	kW	Nm	kW	Nm	kW	Nm	kW	Nm	kW	Nm	kW	Nm	kW	Nm
Series 35	1:1	0.1	94	0.4	75	0.8	75	1.7	64	3.1	58	4.3	54	5.4	51	7.4	46	8.9	42	8.9	33	10.4	32
	1.5:1	0.04	56	0.2	56	0.4	56	0.7	39	1.4	39	2.1	39	2.6	37	3.7	35	4.7	33	4.7	26	5.6	26
	2:1	0.03	56	0.12	45	0.2	37	0.5	37	0.9	34	1.2	30	1.6	30	2.2	27	2.9	27	2.9	22	3.6	22
	3:1	0.01	28	0.03	17	0.06	17	0.15	17	0.31	17	0.45	17	0.6	17	0.9	17	1.2	17	1.3	15	1.6	15
Series 37	1:1	0.2	187	1.0	187	2.0	187	4.3	161	7.7	144	10.8	135	13.6	127	18.5	115	22.6	106	26.3	98	30.6	95
	1.5:1	0.1	140	0.5	140	0.8	112	1.9	107	3.5	98	5.0	94	6.4	90	9.0	84	11.5	81	14.3	80	17.0	80
	2:1	0.1	187	0.3	112	0.6	112	1.3	97	2..5	94	3.5	87	4.5	84	6.4	80	8.1	76	10.1	76	12.0	75
	3:1	0.03	84	0.11	62	0.2	56	0.5	56	0.8	45	1.2	45	1.5	42	2.1	39	2.8	39	3.5	39	4.2	39
	4:1	0.01	37	0.06	45	0.1	37	0.2	30	0.4	30	0.6	30	0.8	30	1.2	30	1.5	28	1.9	28	2.25	28
Series 38	1:1	0.5	468	2.5	468	5.0	468	11.7	438	21.2	397	29.9	373	38	356	52.6	328	65.1	305	76.6	287	-	-
	1.5:1	0.2	281	0.9	253	1.6	225	3.4	191	6.1	171	8.7	163	11.1	156	15.5	145	19.4	136	23.6	133	27.6	129
	2:1	0.3	562	0.6	225	1.2	225	2.6	195	4.8	180	6.9	172	9.0	168	12.8	160	16.6	155	20.6	154	24.6	153
	3:1	0.1	281	0.3	168	0.5	140	1.2	135	2.2	124	3.1	116	4.0	112	5.7	107	7.5	105	9.4	106	11.2	105
	4:1	0.03	112	0.13	97	0.23	86	0.7	105	0.9	67	1.3	65	1.7	64	2.4	60	3.2	60	4.0	60	4.8	60
Series 39	1:1	1.0	936	5.0	936	9.8	917	22.2	831	38.6	723	52.0	649	62.9	589	77.2	482	-	-	-	-	-	-
	1.5:1	0.34	477	1.7	477	3.4	477	9.0	505	18.9	531	29.2	547	39.9	560	61.5	576	83.2	584	105	590	-	-
	2:1	0.5	936	2.0	749	3.6	674	7.9	591	14.5	543	20.7	517	26.6	498	38.0	474	49.5	463	62.8	470	76.3	476
	3:1	0.2	562	0.8	449	1.4	393	3.2	359	5.9	331	8.4	314	10.9	306	15.6	292	20.5	288	25.4	285	30.3	284
	4:1	0.1	374	0.4	299	0.7	262	1.74	261	2.9	217	4.2	210	5.4	202	7.7	192	10.2	191	12.7	190	15.3	191
Series 40	1:1	3.3	3088	16.2	3032	31.8	2976	74.3	2781	126	2358	166	2071	194	1816	-	-	-	-	-	-	-	-
	1.5:1	1.9	2667	8.9	2499	16.3	2288	36.4	2044	65.6	1842	90.8	1700	112	1572	145	1357	-	-	-	-	-	-
	2:1	1.5	2808	6.8	2546	12.5	2340	28	2096	52.0	1947	74.8	1867	96.7	1810	139	1735	181	1694	226	1692	-	-
	3:1	0.7	1965	2.6	1460	4.5	1263	10.3	1157	19.2	1078	27.8	1041	36.1	1014	52.0	973	68.3	959	85.2	957	102	955
	4:1	0.4	1497	1.5	1123	2.8	1048	6.9	1033	11.7	876	16.9	844	21.9	820	31.6	789	42.1	788	52.5	786	62.8	784

Ratings within the bordered area – check thermal limit!

4.2.5. Configuration/Rotation Diagrams for Neeter Drive Gearboxes

Ratios 1:1 & 1.5:1

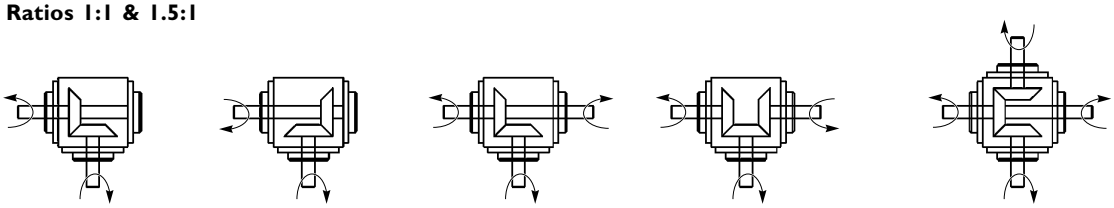

2 (2 Way) *5 (2 Way Reverse)* *3 (3 Way)* *4 (3 Way Reverse)* *7 (4 Way)*

Ratios 2:1 & Above

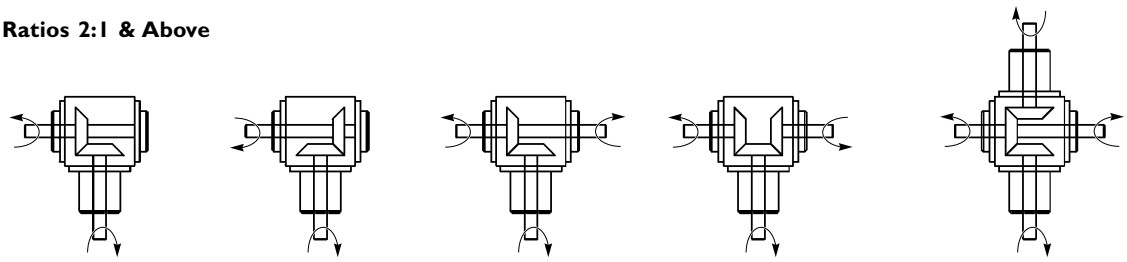

2 (2 Way) *5 (2 Way Reverse)* *3 (3 Way)* *4 (3 Way Reverse)* *7 (4 Way)*

Hollow Shaft - All Ratios

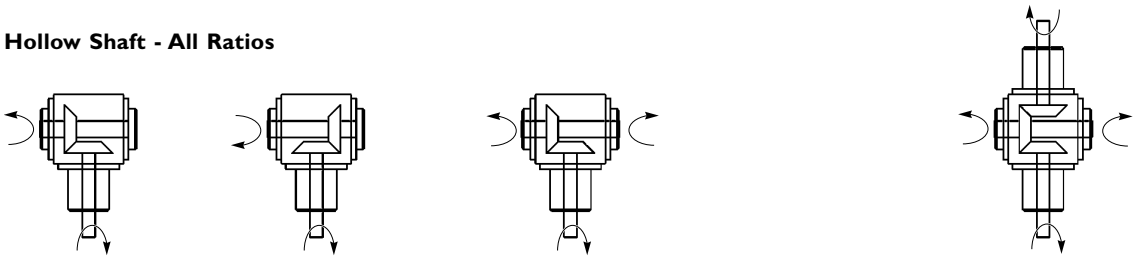

K (2 Way) *L (2 Way Reverse)* *O (3 Way)* *J (4 Way)*

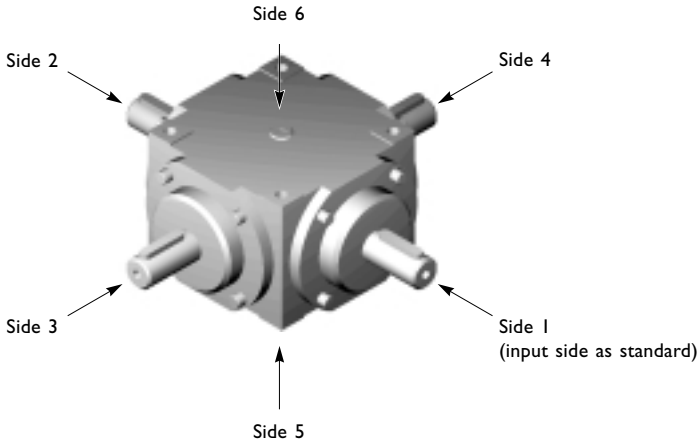

4.2.6. Neeter Drive Gearbox Dimensions

4.2.6.1. Gear Unit Dimensions - Ratios 1:1 and 1.5:1 Solid Shafts

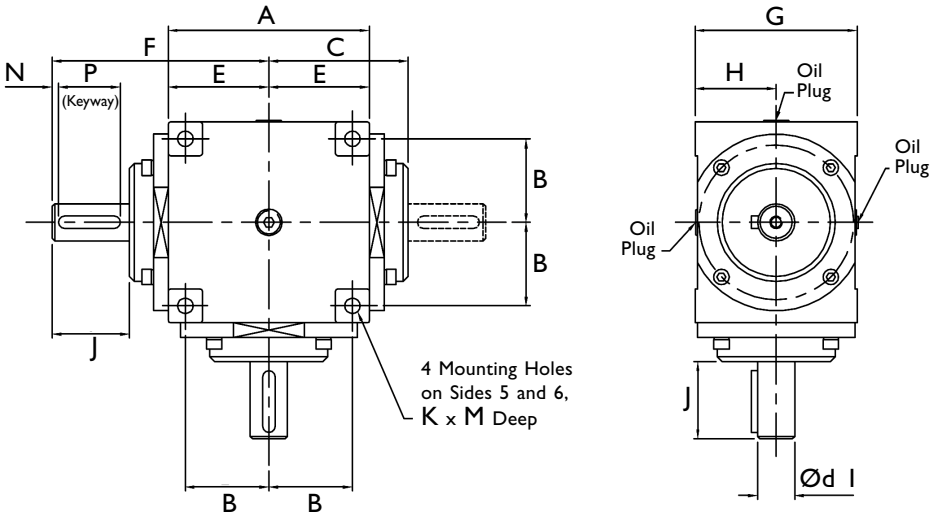

Tapped Hole in End of Each Solid Drive Shaft - Detail 'V'

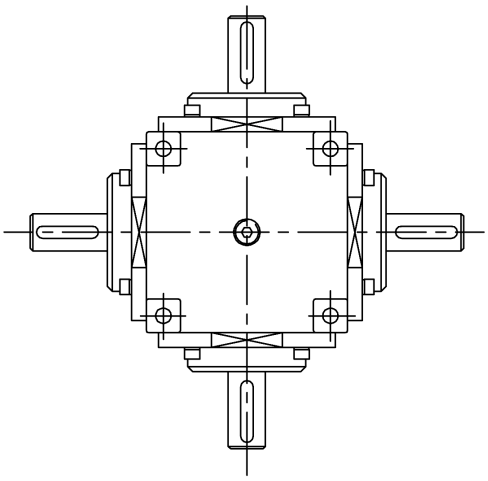

Series	A	B	C	Ød 1 (js6)	E	F	G	H	J	K	M	N	P key to BS4235 Part 1:1972	V
35	90	36.5	64	19	45	105	92	46	41	M8	12	2	6 x 6 x 36	M6 x 16 mm Deep
37	130	54	90	24	65	140	105	52.5	50	M10	20	4	8 x 7 x 40	M8 x 25 mm Deep
38	156	57	104	32	78	165	143	71.5	61	M10	20	5	10 x 8 x 50	M10 x 25 mm Deep
39	198	76	134	48	99	210	190.5	95.25	76	M12	25	2.5	14 x 9 x 70	M12 x 30 mm Deep
40	280	114	165	60	140	267	292	146	102	M16	30	5	18 x 11 x 90	M16 x 38 mm Deep

Note: *1. All dimensions in mm unless otherwise stated.*
2. Dimensions subject to change without notice

4.2.6.2. Gear Unit Dimensions - Ratios 2:1 and Above Solid Shafts

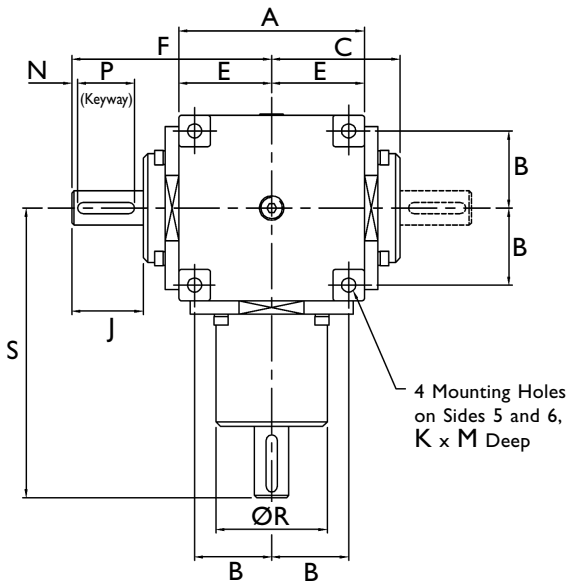

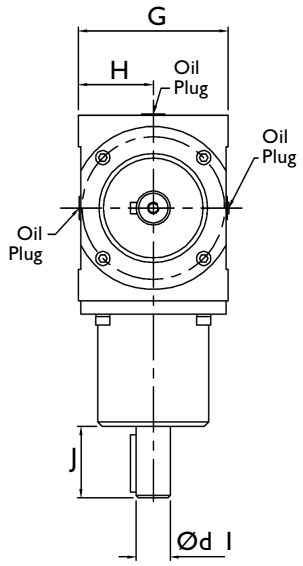

Tapped Hole in End of Each Solid Drive Shaft - Detail 'V'

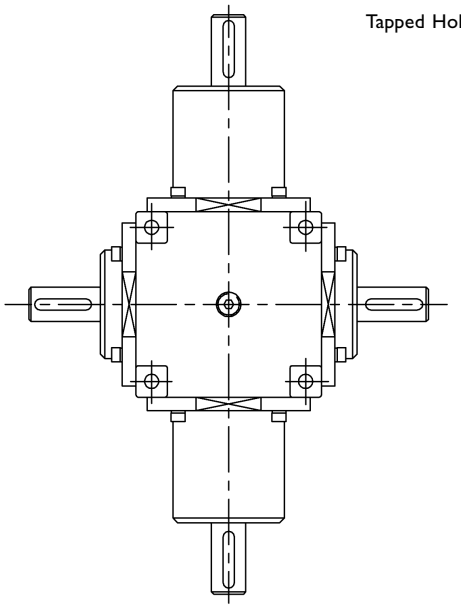

Series 40

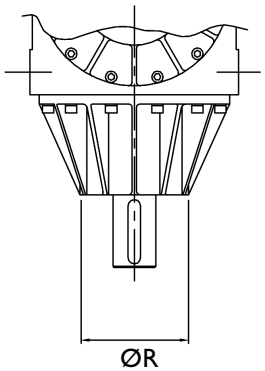

Series	A	B	C	Ød 1 (js6)	E	F	G	H	J	K	M	N	P key to BS4235 Part 1:1972	ØR	S	V
35	90	36.5	64	19	45	105	92	46	41	M8	12	2	6 x 6 x 36	61	143	M6 x 16 mm Deep
37	130	54	90	24	65	140	105	52.5	50	M10	20	4	8 x 7 x 40	78	203	M8 x 25 mm Deep
38	156	57	104	32	78	165	143	71.5	61	M10	20	5	10 x 8 x 50	92	222	M10 x 25 mm Deep
39	198	76	134	48	99	210	190.5	95.25	76	M12	25	2.5	14 x 9 x 70	118	299	M12 x 30 mm Deep
40	280	114	165	60	140	267	292	146	102	M16	30	5	18 x 11 x 90	152**	388	M16 x 38 mm Deep

*** See Series 40 extended input housing detail*

Note: *1. All dimensions in mm unless otherwise stated.*
2. Dimensions subject to change without notice

4.2.6.3. Gear Unit Dimensions - All Ratios Hollow Output Shafts

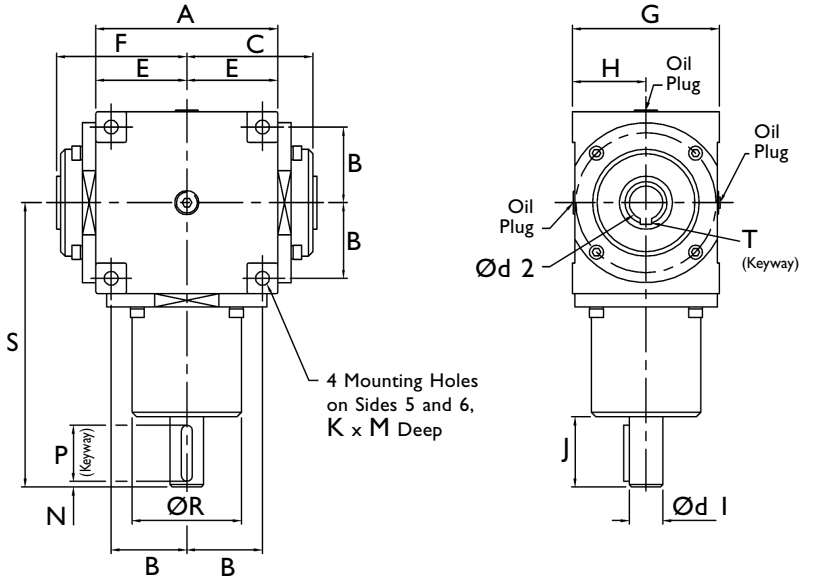

Tapped Hole in End of Each Solid Drive Shaft - Detail 'V'

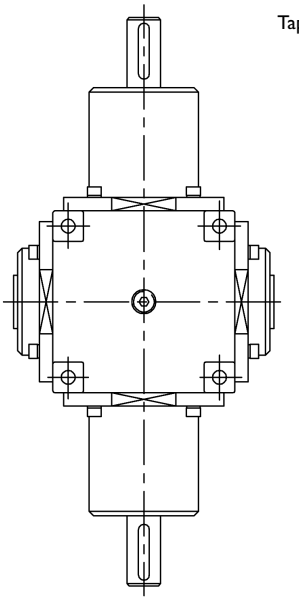

Series 40

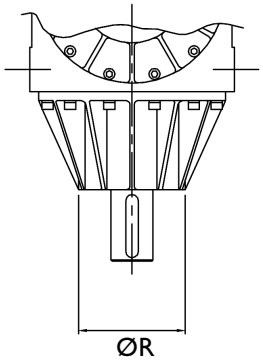

Series	A	B	C	Ød 1 (js6)	Ød 2 H7	E	F	G	H	J	K	M	N	P key to BS4235 Part 1:1972	ØR	S	T key to BS4235 Part 1:1972	V
35	90	36	64	19	19	45	67	92	46	41	M8	12	6	6 x 6 x 36	61	143	6 x 6 x 134	M6 x 16 mm Deep
37	130	54	90	24	24	65	93	105	52.5	50	M10	20	8	8 x 7 x 40	78	203	8 x 7 x 186	M8 x 25 mm Deep
38	156	57	104	32	32	78	107	143	71.5	61	M10	20	10	10 x 8 x 50	92	222	10 x 8 x 214	M10 x 25 mm Deep
39	198	76	134	48	48	99	137	190.5	95.25	76	M12	25	14	14 x 9 x 70	118	299	14 x 9 x 274	M12 x 30 mm Deep
40	280	114	165	60	60	140	168	293	146	102	M16	30	18	18 x 11 x 90	152**	388	18 x 11 x 336	M16 x 38 mm Deep

*** See Series 40 extended input housing detail*

Note: *1. All dimensions in mm unless otherwise stated.*
2. Dimensions subject to change without notice

4.2.6.4. Gear Unit Dimensions - Motor Mounting Flanges

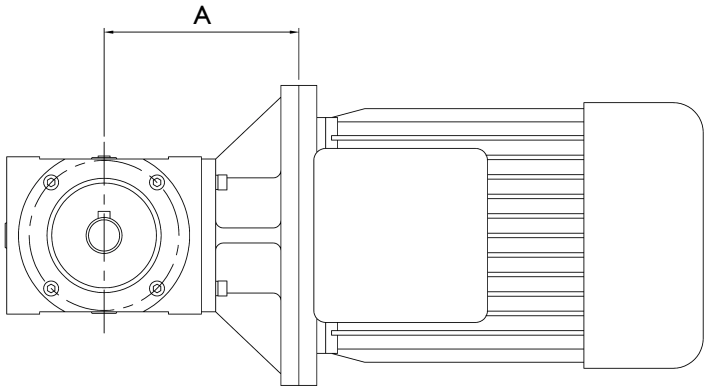

Motor Frame	Gear Unit Series	Ratio	Dimension 'A'	Fear Unit Prefix
D71	35	All	115	A
D80	35	All	115	B
D90	37	All	130	C
D100	37	1:1 and 1.5:1	130	D
D100	37	2:1	140	D
D112	37	1:1 and 1.5:1	130	D
D112	37	2:1	140	D
D112	38	All	190	D
D132	38	All	190	E
D132	39	All	220	E
D160	38	1:1, 1.5:1 and 2:1	190	F
D160	38	3:1 and 4:1	210	F
D160	39	1:1, 1.5:1 and 2:1	220	F
D160	39	3:1 and 4:1	240	F
D180	39	1:1, 1.5:1 and 2:1	220	G
D180	39	3:1 and 4:1	240	G
D180	40	All	280	G
D200	40	All	280	H
D225 : 2 Pole	40	All	280	J
D225 : 4 - 8 Pole	40	All	310	K
D250 : 2 Pole	40	All	310	L

Notes: *1. All other gearbox dimensions are as detailed in Sections 4.2.6.1, 4.2.6.2 and 4.2.6.3*
2. All Flange dimensions conform to standard IEC electric motor details
3. NEMA flanges available on request.

Should you require a unit outside of, or a deviation from our standard product, Neeter Drive's design team is always available to assist in producing a unit to meet your specific requirements. Do not hesitate to contact us with your application details.

Note: *1. All dimensions in mm unless otherwise stated.*
2. Dimensions subject to change without notice.

4.2.7. Special Configuration and Special Features Available from Neeter Drive

This catalogue has been designed to cover the standard range of Neeter Drive products. Neeter Drive can offer a number of special features, which supplement or extend these ranges.

Neeter Drive is also able to offer gearboxes specifically designed to meet customers' needs allowing the units to easily and neatly interface with the end product, saving assembly time and cost.

The following gives some idea of the range of features, which are available, Neeter Drive will be pleased to discuss customers' special requirements and provide advice on the selection of the correct gearbox and special features.

4.2.7.1. Reversible and Disengageable Units

Available on all units with a 1:1 ratio. This feature allows the output shaft rotation to be interrupted or its rotation to be reversed. The gear unit must be at rest during the operation of this feature.

4.2.7.2. Features that have been incorporated into Neeter Drive Units

Stainless Steel	Units manufactured with stainless steel case, covers and shafts, supplied for nuclear environment and the food process industry.
Submersible	Remote underwater valve controllers, units manufactured using customer specified materials for shafts, oil seals and o-rings. As well as redesigning the covers to take the oil seals and interfacing, we supplied a facility for the customer to fix a "pressure balloon" to and pressure compensate the unit.
Military	Gearbox housings manufactured from aluminium, special shaft design and mounting flanges. These units have been used on military vehicles & artillery. Neeter Drive gearboxes have been used in many military vehicles and similar applications over many years.
Humanitarian	Special "high Power" units designed to work on land minesweepers, which have been used extensively throughout the world on this vehicle.
Conveyor Lines	Units designed for a well known off road car, to drive the conveyor system to move the "car bodies" around during assembly.
Pharmaceutical	Specially sealed units, complete with special shafts and mounting interfaces for the unit to be integrated in to a pharmaceutical mixer.
Automotive	Special hollow shaft unit for automotive component manufacture.

Many other customers have had requirements met by having minor alterations, including longer shafts, shorter shafts, spigots on covers, special input/output flanges, special coatings on shafts or special materials, the details options are endless. If you feel that you may require special features please contact Neeter Drive.

4.2.8. Neeter Drive Range - N Product Code

Each Neeter Drive Gear Unit is allocated a Part Number which defines the unit specification. For identification purposes this number is stamped on each unit.

The following chart outlines the Part Numbering System. It should be noted that as Neeter Drive's range of units has developed over the years, certain features are not applicable to the current range.

Character	1	2	3	4	5	6	7	8	9 - 15
Example		38		4	4	2	M	5	XXX

1. MOTOR MOUNTING FLANGES
   - - No Motor Flange (leave blank)
   - A-L Motor Flange (Refer to Section 6.4 for motor identification letter)

2. GEAR UNIT TYPE
   35, 37, 38, 39 40

3. CONFIGURATION
   - 0 3 Way Hollow Shaft
   - 1 In Line 2 Way
   - 2 2 Way
   - 3 3 Way
   - 4 3 Way Reverse
   - 5 2 Way Reverse
   - 6 3 Way Reversible * †
   - 7 4 Way
   - 8 2 Way Disengageable *
   - 9 5 Way (Special)
   - A 3 Way Disengageable * †
   - C 2 Way Reversible *
   - H 2 Way Reverse Disengageable *
   - J 4 Way Hollow Shaft
   - K 2 Way Hollow Shaft
   - L 2 Way Reverse Hollow Shaft

4. GEAR TYPE
   - 3 Straight Bevel *
   - 4 Spiral Bevel

5. EXACT GEAR RATIOS
   - 1 1 to 1 Ratio Gears
   - 1.5 1.5 to 1 Ratio Gears
   - 2 2 to 1 Ratio Gears
   - 3 3 to 1 Ratio Gears
   - 4 4 to 1 Ratio Gears * *

6. VERSION
   - M Metric Shaft Version (mm)
   - E Imperial Shaft Version (ins) *

7. ISSUE No
   Internal Numbering System Only

8. SPECIAL FEATURE
   A unique suffix is allocated by Neeter Drive to define special features. (3 to 7 character code).

* *Non Standard feature*

** *Not available on Series 35*

† *Reverse/Reversible Configuration*
The reverse configuration is the way in which the output shaft rotates (refer Section 4.2.5)
The Reversible unit has a hand wheel on the unit so the output shaft direction of rotation (refer Section 4.2.5) can be changed when stationary.

4.2.9. Neeter Drive Range - N Lubrication and Maintenance Instructions

4.2.9.1 Installation

1. Gear units are shipped dry.
2. Check your gear unit for damage during shipment.
3. Take care when fitting couplings, a blow on a shaft end can cause gear overmeshing.
4. Shaft alignment is critical, check on installation.

4.2.9.2. Oil Levels

The information given below assumes that the gear unit is positioned with all shafts in a horizontal plane.

For input speeds up to 1500 RPM the oil level in the gear unit should be maintained just below the centreline of the shafts. A sight glass or level plug is provided for level indication.

A change of oil level may be required for speeds of 1500 RPM or above, and Neeter Drive should be consulted.

For input speeds of 250 rpm or below grease lubrication should be used.

Important *Neeter Drive should also be advised when a gear unit is installed with a shaft positioned vertically.*

4.2.9.3. Case Temperature

Bevel units will operate with a maximum case temperature of 80°C. If this temperature is exceeded Neeter Drive should be consulted.

4.2.9.4. Maintenance Instructions

A new gear unit should be drained after 100 hours and cleaned using a light flushing oil. After this the gear unit oil should be changed every six months or 2500 operating hours. Where severe operating conditions are encountered more frequent oil changes are advised. The gear unit should be warm when an oil change is undertaken. Check oil levels regularly.

Warning: *The case temperature must not exceed 80°C (See case temperature)*

4.2.9.5. Oil Specification

Ambient Temperature	Gear Oil	
Below +5°C	ISO 150	Mobilgear 629 or equivalent
+5°C to +40°C	ISO 220	Mobilgear 630 or equivalent
Above 40°C	ISO 320	Mobilgear 632 or equivalent

Fill quantities (Average)

Series No	35	37	38	39	40
Litres	0.14	0.29	0.75	1.71	3.27
Pints	0.24	0.50	1.32	3.00	5.75

4.2.9.6. Grease Nipples/Grease Filled Units

Use EP1 Grease e.g. Mobilux EP1 or equivalent

4.2.9.7. Spares

When ordering spares always specify the part number and serial number stamped on the gear unit.

Contents

NEETER DRIVE
SPIRAL BEVEL GEARBOXES

4.3. BA - Series Cubic Spiral Bevel Gearboxes

4.3.1. BA Gearbox Features

- Robust cast iron construction.
- Cuboid body shape - good symmetry.
- Universal mounting on all sides.
- 10 gearbox sizes.
- 6 standard ratios from 1:1 to 6:1.
- Special ratios available on request.
- Torque range 10 Nm to 9000 Nm.
- High quality bearings giving long life.
- **Input Shaft Bearings** - are supported by high quality ball bearings up to size 2, and taper roller bearings up to sizes 23 to 6.
- **Output Shaft Bearings** - are supported by deep groove ball bearings to withstand high radial loads and give long life.
- **Gearbox Housing** - produced in quality grey cast iron ensuring strength and stability.
- **Alloy steel gears** - hardened and lapped in pairs then set in the gearbox to give the optimum setting for quiet efficient running.

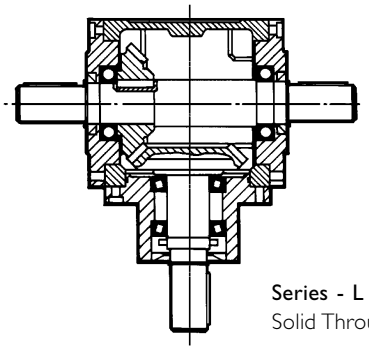

Series - L
Solid Through Shaft

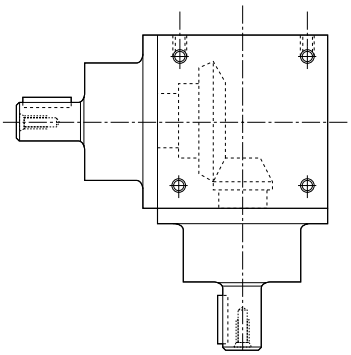

Series - K
Solid Shaft Independent Bearings for each Shaft.

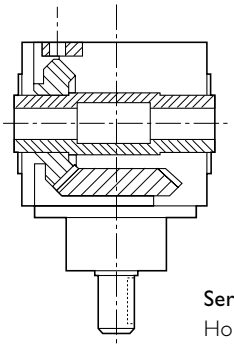

Series - H
Hollow Shaft

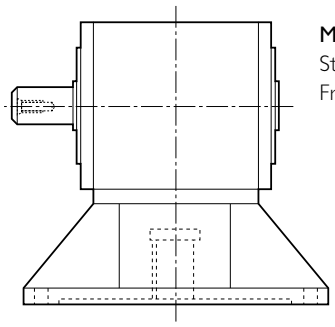

Motor Flanges
Standard IEC Motor Frames (B5 and B14).

Neeter Drives range of Cubic spiral bevel gear boxes are produced in a modular design with many standard models covering a wide performance range. The modular design allows multi-shaft and power take off drives. Standard units have two or three shafts although more are available on special request, consult Neeter Drives. All the gearboxes can be driven by either input or output shafts to increase or decrease in speed and all the gearboxes can be supplied with flanges to suit direct mounting of standard IEC frame motors.

4.3.2. BA Gearbox Mounting

The spiral bevel gearboxes are supplied with tapped mounting holes in all faces however the following must be considered.

1. **Grease Lubrication** - No breather or sightglass required. The gearbox can be mounted in any orientation.
2. **Oil Lubrication** - Breather, sightglass and drain plug required. The gearbox can be mounted in any orientation but the side of the gearbox facing downwards "side-under" and the side in which the sightglass and breather are required must be stated when ordering. Note breathers and sightglasses cannot be fitted on the same face as the shaft.

4.3.3. Performance of BA Spiral Bevel Gear Boxes

4.3.3.1. Torque/Speed Graphs

Selection Graphs by Output Torque

Ratio 1:1 to 2:1

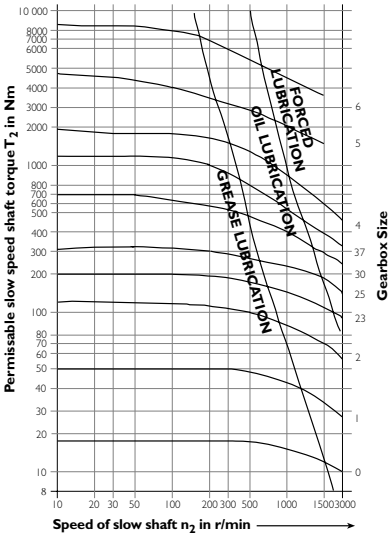

Ratio 3:1

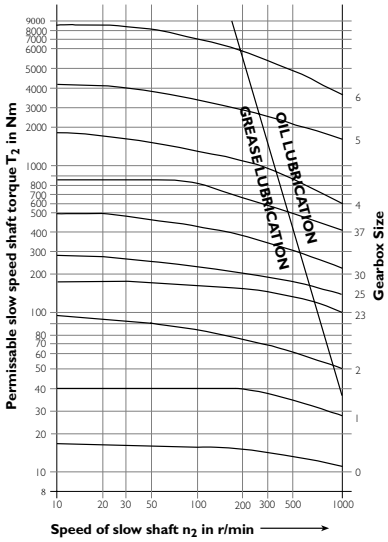

Ratio 4:1

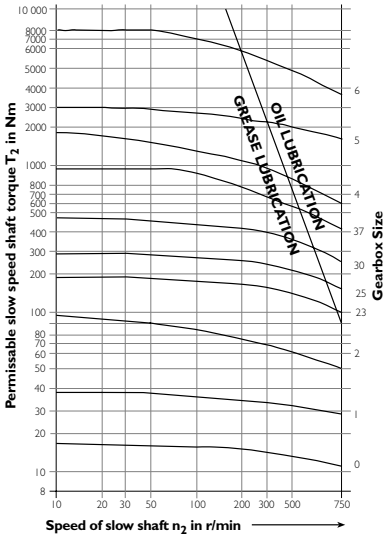

Ratio 5:1

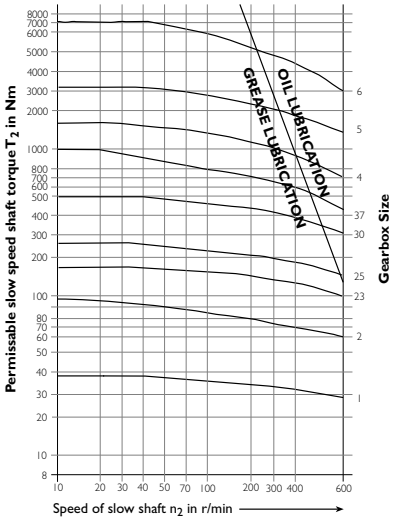

Ratio 6:1

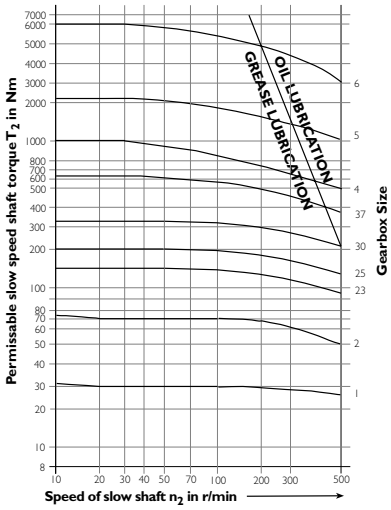

4.3.3.2. Gearbox Efficiency

Size	0	1-23	25-4	5 & 6
Efficiency	0.80	0.90	0.95	0.96

4.3.3.3. Radial Loads

The tables show the maximum radial loads in kN by gearbox type and the individual shafts. Details of axial load capacity on request. Interpolate intermediate values. Below 50 rpm the load capacity remains constant.

$$\text{Radial Force, } F_r = \frac{2000 \times T \times f_z}{d}$$

Where T = gearbox output torque in Nm
f_z = factor from table opposite
d = p.c.d. in mm of gear, sprocket

Factor f_z	Transmission element
1.12	Gears
1.25 - 1.4	Chain sprockets
1.5 - 2.0	V-Belt pulleys
2.0 - 2.5	Flatbelt pulleys with jockey pulley
2.5 - 3	Flatbelt pulleys without jockey pulley

Shaft Speed (rpm)	0		1		2		23		25		30		37		4		5		6	
	D_1	D_2	D_1	D_2	D_1	D_2	D_1	D_2	D_1	D_2	D_1	D_2	D_1	D_2	D_1	D_2	D_1	D_2	D_1	D_2
50	0.51	0.8	0.78	1.5	1.4	2.2	2	3.8	3.2	6.5	5.5	9.9	11	15.5	20	28	40	40	55	70
200	0.39	0.67	1.57	1	0.77	1.6	1.4	2.6	2.3	4.2	4	6.9	7.2	9	15	18	28	29	40	49
1000	0.25	0.4	0.39	0.68	0.57	1	0.9	1.6	1.5	2.8	2.8	4.2	4.8	6.5	8	12	18	18	28	30
3000	0.18	0.3	0.29	0.49	0.45	0.75	0.7	1.3	1.1	2.1	1.9	3.1	3.7	4.8	6.8	8.5	15	15	19	-

4.3.4. Selection

Calculate the power capacity require for the gearbox $P\ (kW) = P_d\ (kW) \times F_L \times F_T$

Where P_d = Power required to drive the machine.
F_L = Load factor (refer to table)
F_T = Temperature factor (refer to table)

Then calculate the slow shaft torque required, T_2. $\text{Slow shaft torque, } T_2\ (Nm) = \dfrac{9550 \times P(kW)}{\text{Gearbox Output Speed}}$

Select a gearbox using the torque selection charts for the appropriate gear ratio.

Note *Standard gearboxes are grease lubricated and should not exceed a case temperature of 90°C (194°F). Consult Neeter Drives for higher temperatures.*

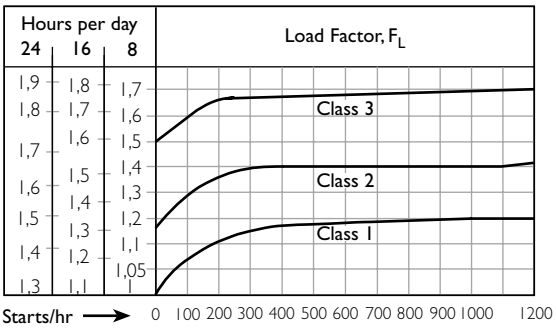

Temperature	Temperature Factor, F_T
10°C	0.85
20°C	1.0
30°C	1.1
40°C	1.2
50°C	1.4

Load Characteristics of the machine

Class 1 Uniform load (torque change + 10%) no masses to be accelerated.

Class 2 Medium shocks, short term overload (torque change + 25%) larger masses to be accelerated.

Class 3 Heavy shocks, short term overload (torque change + 100%) very large masses to be accelerated.

4.3.5. BA Gearbox Dimensions - Series L

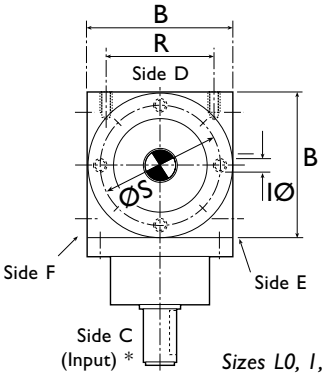

Sizes L0, 1, 2, 25, 30, 4

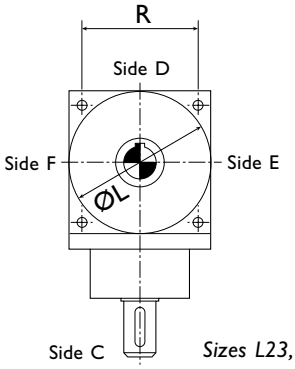

Sizes L23, 37, 5, 6

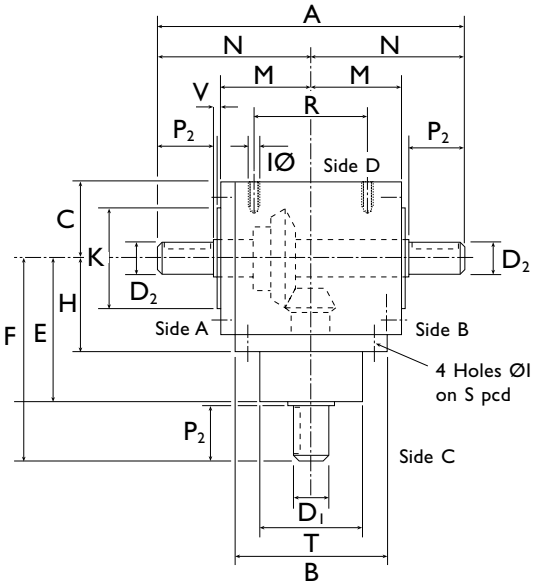

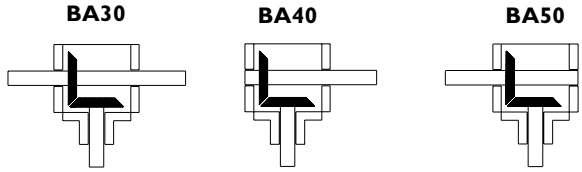

** Side C is output in speed increasing application for ratios over 1:1*

Type	Gear Ratio	A	B	C	D_1 j6	D_2 j6	E	F	H	I	K f7	L h7	M	N	P_1	P_2	R	S	T	V
LO	1 to 2	144	65	32.5	12	12	72	100	42	M6	44	-	42	72	26	26	45	54	44	2
	3 to 4						87	115												
L1	1 to 2	190	90	45	18	18	85	122	55	M8	60	-	55	95	35	35	70	75	60	2
	3				12		85	122												
	4 & 6				12		95	132												
L2	1 to 2	244	120	60	25	25	115	162	75	M10	80	-	72	122	45	45	100	100	80	3
	3				20		115	162							45				80	
	4				20		125	172							45				80	
	5 & 6				15		125	162							35				70	
L23	1 to 2	274	140	70	32	32	128	180	85	M10	-	135	85	137	50	50	110	-	95	-
	3				28		128	180											95	
	4 to 6				24		143	195											85	
L25	1 to 2	320	160	80	35	35	150	212	95	M12	110	-	95	160	60	60	120	135	110	3
	3				28		150	212											100	
	4 to 6				24		170	232											100	
L30	1 to 2	406	200	100	42	42	190	273	120	M12	120	-	117	203	80	80	160	175	120	3
	3 & 4				35			261							68				120	
	5 & 6				28			261							68				110	
L37	1 to 2	454	230	115	55	55	213	305	132	M16	-	225	135	227	90	90	180	-	150	-
	3 to 6				40		228	310							80				120	
L4	1 to 2	570	260	130	60	60	265	380	150	M16	180	-	150	285	110	110	220	230	160	20
	3 to 6				45			360							90					
L5	1 to 2	820	350	175	80 k6	80 K6	385	570	200	M20	200	345	215	410	170	170	285	-	-	20
	3				65 k6			540							140					
	4				60 k6			540							140					
	5 & 6				55 k6			510							110					
L6	1	940	450	225	90	90	445	600	250	M20	-	445	245	470	150	150	360	-	-	-
	1.5 to 2				90		415	570							150					
	3				75		415	540							120					
	4 to 5				70		415	540							120					
	6				60		415	530							110					

Note: *All dimensions in mm.*
Dimensions subject to change without notice.

4.3.6. Standard BA Series Gearbox Selection

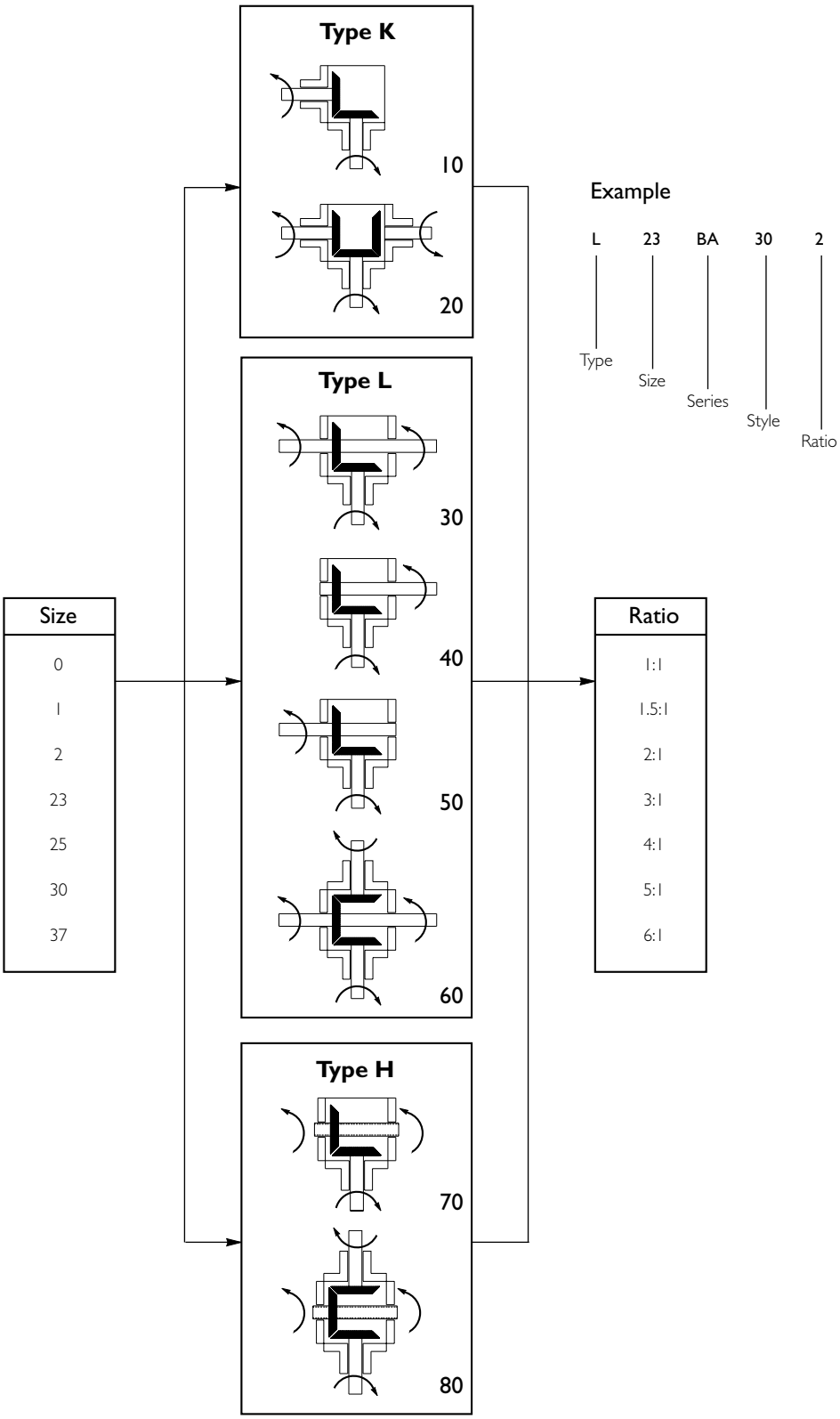

Contents

NEETER DRIVE
SPIRAL BEVEL GEARBOXES

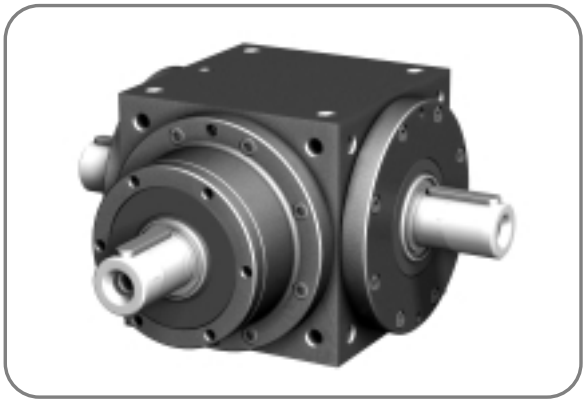

4.4. Neeter Drive PowerGear Range

Studies of many applications covered by our bevel gearboxes have been taken into account in the design of the new PowerGear range. The PowerGear a consistently designed new series has been produced to meet with a specific torque/speed spectrum. The advantages of this approach are:

- The compact and rigid design assures highest performance in a small footprint.
- Lubricated for life, the gearboxes are, depending on their size, maintenance free, if operated under normal conditions.
- Fretting-free torque transfer using a friction locked fit between shaft and bevel gear.

4.4.1. Features of PowerGear Bevel Gearbox

- Housings and flanges manufactured from robust Spheroidal Graphite (SG) iron.
- 8 Gearbox sizes.
- 6 standard ratios from 1:1 to 5:1.
- 2-way, 3-way and 4-way.
- Solid Shafts and Hollow Shafts.
- Motor Adaptors.
- Torque range from 25Nm → 5200Nm.
- Input speeds up to 6500rpm.
- Universal mounting on all sides.
- High quality taper roller bearings giving long operational life.
- Optimised gear tooth pattern during assembly giving uniform load distribution.
- The high efficiency of the gearbox, 98%, reduces energy costs.
- More than 45% of volume economised.
- More than 100% more performance at same construction size.
- More than 60% of weight economised.
- Maintenance Free.

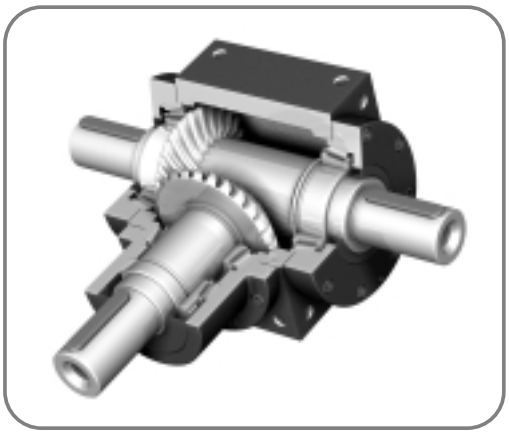

The main advantages of the PowerGear design will be found in applications with requirements of high torque at medium to high speeds, robust unit in a small size, useable in any mounting/working position. Typical applications for the PowerGear are angular torque transfer and torque distribution in single, or multiple shaft configurations. In non-stationary applications where weight is extremely important, the PowerGear design is the ideal solution. For applications requiring a 1:1 ratio unit capable of handling greater torque than the standard PowerGear a higher rated "X" range is available utilising the same size cases.

4.4.2. Neeter Drive PowerGear Performance Ratings

PowerGear		P75	P90	P110	P140	P170	P210	P240	P280
1:1	Output Torque, M2 (Nm)	45	78	150	360	585	1300	2150	3200
	Max Torque M2*	68	117	225	540	878	1950	3225	4800
1.5:1	Output Torque, M2 (Nm)	45	78	150	360	585	1300	2150	3200
	Max Torque M2*	68	117	225	540	878	1950	3225	4800
2:1	Output Torque, M2 (Nm)	42	68	150	330	544	1220	2010	3050
	Max Torque M2*	63	102	225	495	816	1830	3015	4575
3:1	Output Torque, M2 (Nm)	33	54	120	270	450	1020	1650	2850
	Max Torque M2*	50	81	180	405	675	1530	2475	4275
4:1	Output Torque, M2 (Nm)	28	52	100	224	376	860	1410	2300
	Max Torque M2*	42	78	150	336	564	1290	2115	3450
5:1	Output Torque, M2 (Nm)	25	40	85	196	320	740	1210	2000
	Max Torque M2*	38	60	128	294	480	1110	1815	3000
Max Speed	Input Speed, N1 (rpm)	6500	5500	4500	3500	3000	2200	2000	1700
at 2% Max Load	Standard Output Backlash (arcmin)	6 to 15	6 to 14	6 to 13	6 to 13	6 to 12	6 to 12	6 to 12	6 to 11
	Minimum Output Backlash (arcmin)	5 to 6	4 to 6	4 to 6	3 to 6	3 to 6	3 to 6	3 to 6	3 to 6
Allowable Radial Load (N)	Input Shaft d1	900	1300	2000	3500	5000	8500	11000	15000
	Output Shaft d2	1100	1600	2500	4500	6000	10500	15000	18000
Allowable Axial Load (N)	Input Shaft d1	450	650	1000	1750	2500	4250	5500	7500
	Output Shaft d2	550	800	1250	2250	3000	5250	7500	9000
Weight (kg)		4.5	8	13	22	38.5	71	103.5	155
Thermal	Performance Limit (kW)	5.5	7.4	10.8	16.1	23.4	28.6	45.3	60.3

Operating temperature: -30°C → +100°C

Service Life > 15000 hours (when correctly installed and operated within capabilities).

The maximum allowable oil bath temperature limits the gearbox performance. The required effective performance must not exceed the limit values allowed for continuous duty.

Duty cycle per hour in %	100	80	60	40	20
Factor	1.0	1.2	1.4	1.6	1.8

If on intermittent duty or in the event of increased ambient temperatures, the following factors can be applied as guide values for the determination of the related allowable thermal performance limit.

Ambient temperature °C	10	20	30	40	50
Factor	1.20	1.00	0.87	0.75	0.62

For all the PowerGear gearbox details request a full catalogue from Neeter Drive

4.4.3. Examples of PowerGear Bevel Gearbox Arrangements



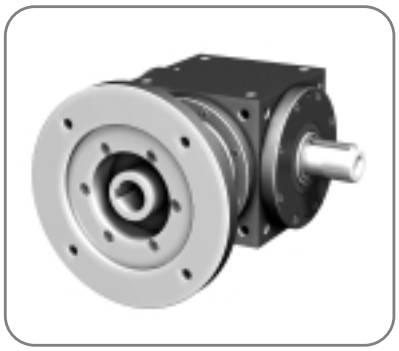


4.4.4. Neeter Drive PowerGear Selection Procedure

(a) Make initial gearbox selection based on defined information about the application:

Performance required P (kW) at n_{input} (rpm)

Note: $P_{input} \approx P_{output}$ at efficiency of 98% approximately.

Input speed required (rpm).

Output speed required (rpm).

Duty cycle required (ED).

Ambient Temperature.

Gear Ratio = input speed (n_{input}) / output speed (n_{output})

Select nearest gear ratio to the exact calculated value.

Output Torque M_{output} (Nm) = $(9550 * P_{output})/n_{output}$

(b) Check Performance Capabilities

Check that output torque required is less than gearbox torque rating.

$M_{output} \leq$ Nominal Torque $M2_{nominal}$

Check speed rating

Speed $n_{input} \leq$ Speed $N1_{max}$

Check Thermal Performance Rating of gearbox.

Performance P ≤ thermal performance limit P_{therm}

Check Radial and Axial load rating of gearbox

Radial and axial shaft loads ≤ allowable values.

Note: *Force contact point on shaft is the middle of the shaft.*

POWER JACKS
manufacturers of precision screw jacks, actuators and gearboxes Group

Section 5.1. - Reduction Gearbox Range

Helical Worm Gearboxes up to 45 kW
In-Line Helical Gearboxes up to 90 kW
Parallel Helical Gearboxes up to 18.5 kW
Worm Gearboxes up to 140 kW

Section 5.2. - Helical Worm Reduction Gearboxes

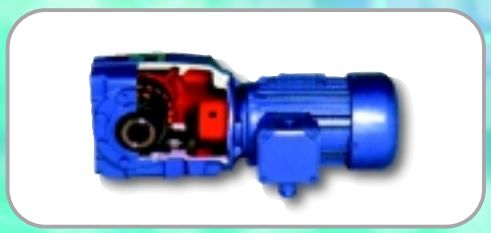

Power capacity up to 45 kW
Output torque capacity up to 10000 Nm
Solid shaft (single and double) and hollow shaft
Motorised or gear heads.
Foot and flange and shaft mount available
Standard double reduction gear ratios up to 250:1
Up to quintuplet reduction available

5. reduction **gearboxes**

Section 5.3. - In-line Helical Reduction Gearboxes

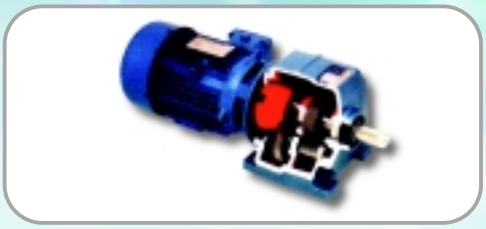

Power capacity up to 90 kW
Output torque capacity up to 11000 Nm
Solid shaft
Motorised or gear heads
Foot and flange mount available.
Standard double reduction gear ratios up to 70:1
Up to quintuplet reduction available

Contents

5.1. Reduction Gearboxes - Range

Power Jacks offers a wide range of reduction gearboxes for actuator system building whether it be a single motorised actuator or several actuators mechanically linked. The gearboxes are available as motorised units as standard, however the gearbox unit itself can be supplied. This design guide lists the most popular types of gearboxes for actuator system building with many more available on request from Power Jacks.

5.1.1. Listed Reduction Gearboxes

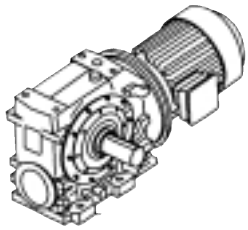

Helical Worm Gearboxes
Power capacity up to 45 kW.
Output torque capacity up to 10000 Nm.
8 Gearbox sizes available.
Double Reduction standard up to 250:1 gear ratio.
Up to Quintuple reduction available on request.
Foot, Flange and Shaft mounting.

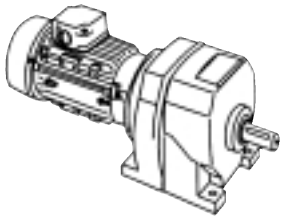

In-Line Helical Gearboxes
Power capacity to 90 kW.
Output torque capacity to 11000 Nm.
9 Gearbox sizes available.
Double Reduction standard up to 70:1 gear ratio.
Up to Quintuple reduction available on request.
Foot and flange mounting.

5.1.2. Reduction Gearboxes Also Available

Parallel Helical Gearboxes
Power capacity to 18.5 kW.
Output torque capacity to 2900 Nm.
4 Gearbox sizes available.
Double Reduction standard up to 100:1 gear ratio.
Up to Triple reduction available on request.
Foot, Flange and Shaft mounting.

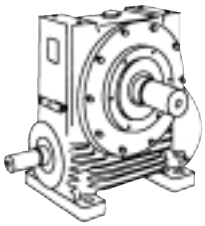

Worm Gearboxes Small Size
Power capacity to 11 kW.
Output torque capacity to 1000 Nm.
6 Gearbox sizes available.
Single Reduction standard up to 70:1 gear ratio.
Double reduction available on request.
Foot, Flange and Shaft mounting.

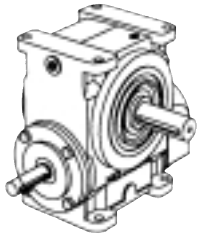

Worm Gearboxes Medium Size
Power capacity to 140 kW.
Output torque capacity to 10000 Nm.
4 Gearbox sizes available.
Single Reduction standard up to 70:1 gear ratio.
Double reduction available on request.
Foot, Flange and Shaft mounting.

The gearboxes can take either IEC or NEMA standard motors. This allows the fitment of brake motors, flame proof motors, DC motors, AC inverter rated motors and energy efficient motors. All the gearboxes are dimensionally interchangeable with major European gearbox manufacturers. The advanced design, high grade materials and quality manufacture of the gearboxes are maximised by the high internal efficiency to ensure a trouble free operational life with simple maintenance routines kept to an absolute minimum.

5.2. Helical Worm Reduction Gearboxes

5.2.1. Gearbox Selection

Calculate the power capacity required for the gearbox:

$P\ (kW) = P_d\ (kW) \times F_L$ Where P_d = Power required to drive the machine.

F_L = Load factor (refer to table).

Select a gearbox type to the closest above the required power (P_d), refer 4.3.1.2.

Find the closest matching output speed hence gear ratio for that gearbox type for the application (refer 4.3.1.2.).

Check that the gearbox power rating is suitable for the actual output speed.

5.2.2. Helical Worm Reduction Gearbox Performance

Power (kW)	C0320	C0420	C0520	C0620	C0720	C0820	C0920	C1020
0.12	M	R	F					
0.18	M	R	F	F				
0.25	M	M	R	F				
0.37	M	M	R	R				
0.55	M	M	M	R	F			
0.75	R	M	M	M	R	F		
1.1	F	M	M	M	M	F	F	
1.5	F	R	M	M	M	R	F	
2.2		F	R	M	M	M	R	F
3.0			R	M	M	M	R	F
4.0			F	R	M	M	R	R
5.5				R	R	M	R	R
7.5				F	R	M	R	R
11.0					F	R	M	M
15.0						F	M	M
18.5							M	M
22.0							R	M
30.0							F	R
37.0							F	R
45.0							F	F

M - Most/All gear ratios available
R - Reduced range of gear ratios available
F - Few gear ratios available

For exact availability of gear ratios in power ranges and full gearbox details consult Power Jacks.

Load Factors (F_L)			
Duration of Service (hours per day)	Uniform Load	Moderate Shock Load	Heavy Shock Load
Under 3	0.8	1	1.5
3 to 10	1	1.25	1.75
Above 10	1.25	1.5	2

5.2.3. Helical Worm Gearbox Output Speeds and Gear Ratios

Based on double reduction motorised units with 4 Pole, 1440 rpm AC electric motors.

Gear Box Model																
Nominal	C0320		C0420		C0520		C0620		C0720		C0820		C0920		C1020	
Gear Ratio	Exact G/Ratio	Output Speed	Exact G/Ratio	Output Speed	Exact G/Ratio	Output Speed	Exact G/Ratio	Output Speed	Exact G/Ratio	Output Speed	Exact G/Ratio	Output Speed	Exact G/Ratio	Output Speed	Exact G/Ratio	Output Speed
8	8.591	167.6	8.591	167.6	8.31	173.2	8.23	174.9	7.90	182.3	7.77	185.3	7.97	180.6	7.95	181.1
11	11.61	124.0	11.61	124.0	11.66	123.5	11.57	124.5	10.94	131.6	11.01	130.8	10.98	131.1	11.11	129.6
12	13.2	109.1	13.2	109.1	12.85	112.1	12.97	111.0	12.29	117.2	12.24	117.6	12.30	117.1	12.08	119.2
14	14.95	96.3	14.95	96.3	14.59	98.7	14.56	98.9	13.52	106.5	13.61	105.8	13.81	104.3	13.72	105.0
16	16.36	88.0	16.36	88.0	16.09	89.5	15.93	90.4	15.80	91.1	15.54	92.7	16.68	86.3	16.63	86.6
18	19.13	75.3	19.13	75.3	18.53	77.7	18.49	77.9	17.66	81.5	17.60	81.8	17.79	80.9	17.87	80.6
20	20.61	69.9	20.61	69.9	21.05	68.4	20.96	68.7	20.07	71.7	19.76	72.9	19.88	72.4	19.29	74.7
22	22.11	65.1	22.11	65.1	22.56	63.8	22.40	64.3	21.89	65.8	22.03	65.4	22.96	62.7	23.23	62.0
25	25.14	57.3	25.14	57.3	24.86	57.9	25.11	57.3	24.59	58.6	24.47	58.8	25.73	56.0	25.27	57.0
28	28.48	50.6	28.48	50.6	28.24	51.0	28.18	51.1	27.03	53.3	27.22	52.9	28.89	49.8	28.70	50.2
32	33.71	42.7	33.71	42.7	32.55	44.2	33.48	43.0	30.81	46.7	31.78	45.3	31.43	45.8	31.85	45.2
36	36.43	39.5	36.43	39.5	35.86	40.2	35.79	40.2	35.31	40.8	35.20	40.9	37.22	38.7	37.38	38.5
40	39.26	36.7	39.26	36.7	40.74	35.3	40.57	35.5	40.15	35.9	39.51	36.4	41.59	34.6	40.36	35.7
45	45.5	31.6	45.5	31.6	46.84	30.7	47.32	30.4	44.13	32.6	43.64	33.0	44.55	32.3	43.65	33.0
50	53.31	27.0	53.31	27.0	50.93	28.3	50.52	28.5	49.90	28.9	49.26	29.2	49.49	29.1	48.51	29.7
56	56.19	25.6	56.19	25.6	55.45	26.0	55.71	25.8	53.63	26.9	54.60	26.4	57.66	25.0	58.85	24.5
63	64.21	22.4	64.21	22.4	63.00	22.9	64.80	22.2	61.62	23.4	63.56	22.7	65.74	21.9	66.63	21.6
71	74.55	19.3	74.55	19.3	73.37	19.6	73.92	19.5	69.00	20.9	69.64	20.7	69.91	20.6	69.18	20.8
80	82.83	17.4	82.83	17.4	82.67	17.4	80.94	17.8	75.56	19.1	76.50	18.8	77.18	18.7	79.71	18.1
90	86.67	16.6	86.67	16.6	90.67	15.9	91.58	15.7	88.26	16.3	87.29	16.5	93.18	15.5	91.32	15.8
100	101.5	14.2	101.5	14.2	98.57	14.6	97.78	14.7	99.79	14.4	98.53	14.6	103.50	13.9	101.50	14.2
112	114.3	12.6	114.3	12.6	109.10	13.2	110.60	13.0	104.30	13.8	102.40	14.1	106.20	13.6	107.80	13.4
125	129.9	11.1	129.9	11.1	124.00	11.6	124.00	11.6	115.90	12.4	117.90	12.2	119.40	12.1	115.80	12.4
140	142	10.1	142	10.1	142.00	10.1	143.10	10.1	138.00	10.4	139.30	10.3	146.20	9.8	144.70	10.0
160	157.8	9.1	157.8	9.1	160.00	9.0	156.70	9.2	151.10	9.5	153.00	9.4	161.40	8.9	166.70	8.6
212	217.8	6.6	217.8	6.6	211.10	6.8	214.00	6.7	208.60	6.9	204.80	7.0	222.10	6.5	225.50	6.4
250	247.5	5.8	247.5	5.8	240.00	6.0	240.00	6.0	231.80	6.2	235.80	6.1	249.70	5.8	242.30	5.9

Note: *1. Units with 6 Pole, 960 rpm, motors available on request.*
2. Output speed in rpm.

5.2.4. Helical Worm Gearbox Dimensions

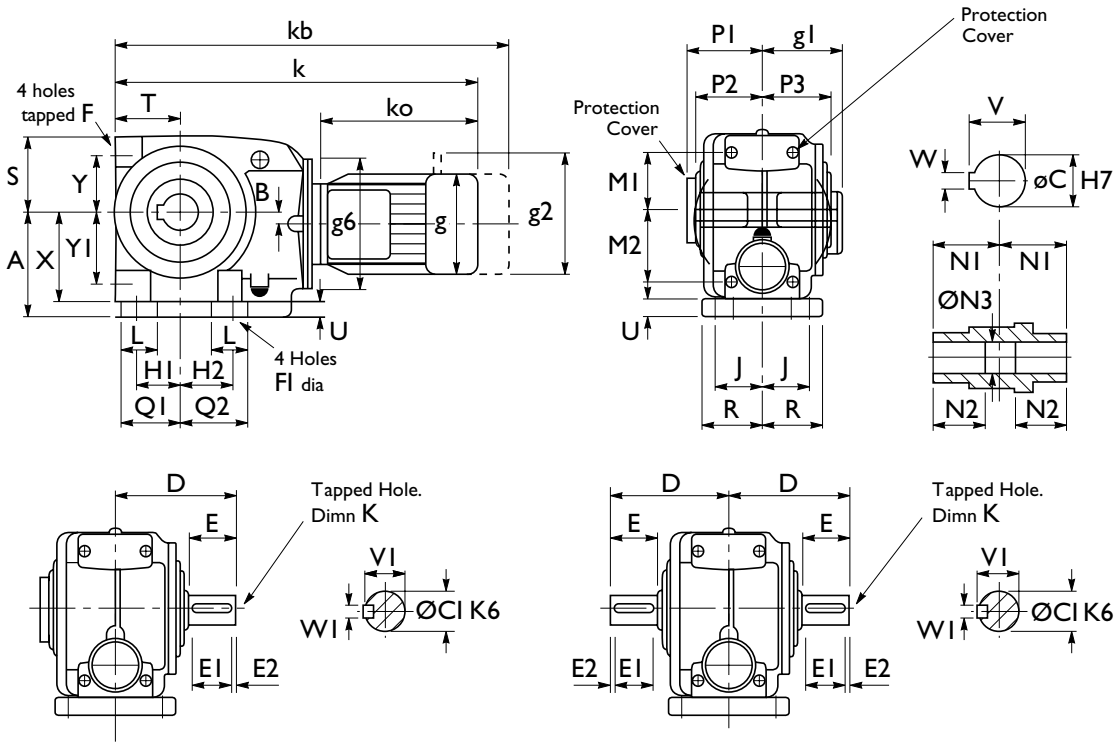

Size	A	B	C	C1	D	E	E1	E2	F	F1	H1	H2	J	K	L	M1
C0320	80	5.3	20	20	100	35	31	3	M8 x 1.25, 15 deep	9	35	28	45	M6 x 1.0, 16 deep	25	40
C0420	100	15	30	25	115	46	42	3	M10 x 1.5, 20 deep	11	35	45	50	M10 x 1.5, 22 deep	35	53
C0520	112	13	35	30	134	60	53	3	M10 x 1.5, 18 deep	11	45	55	55	M10 x 1.5, 22 deep	40	65
C0620 Std	140	17	45	35	160	63	55	3	M12 x 1.75, 20 deep	14	60	70	65	M12 x 1.75, 22 deep	50	76
C0620 HD	140	17	45	45	195	98	80	5	M12 x 1.75, 20 deep	14	60	70	65	M16 x 2.0, 36 deep	50	76

Size	M2	N1	N2	N3	P1	P2	P3	Q1	Q2	R	S	T	U	V	V1	W	W1	X	Y	Y1
C0320	40	62	52	20.2	70	61	57	47	41	55	68	54	9	22.9	22.5	6	6	71	40	40
C0420	65	65	54	30.2	74.5	65.5	65	53	62	62	75	64	14	33.5	28	8	8	86	53	65
C0520	77	70	56	35.3	79	70	70	65	75	68	88	68	16	38.5	33	10	8	96	65	77
C0620 Std	96	90	70	45.3	101	90	90.5	81	91	80	103	90	20	49	38	14	10	120	76	96
C0620 HD	96	90	70	45.3	101	90	90.5	81	91	80	103	90	20	49	48.5	14	14	120	76	96

Motors		All Sizes					C0320		C0420		C0520		C0620	
		ko	g	g1	g2	g6	k	kb	k	kb	k	kb	k	kb
Motor Frame Size	**63**	185	122	101	160	140	361	403	381	423	387	429	461	503
	71	210	137	107	167	105	390	431	410	451	412	453	486	527
	80	230	158	118	190	120	425	475	445	495	432	482	506	556
	90S/L	270	177	149	218	140	475	534	495	554	472	531	555	614
	100/112*	340	197	159	238	160	553	621	573	641	592	610	669	737
	132	402	253	184	288	200	-	-	-	-	-	-	733	804

* *112 Motor not available on size C0320.*

Other available mounting options:

- Ouput flange mounted
- End mounted feet
- C - Face mounting
- Top mounted with bolting fixtures
- End mounted with bolting fixtures
- Banjo Torque arm

Consult Power jacks for details
Dimensions subject to change without notice.

5.2.4. Helical Worm Gearbox Dimensions

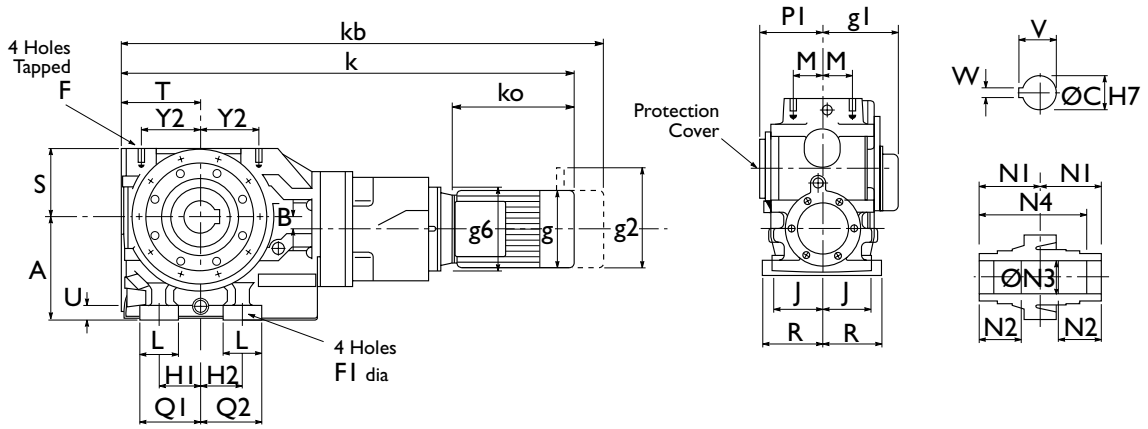

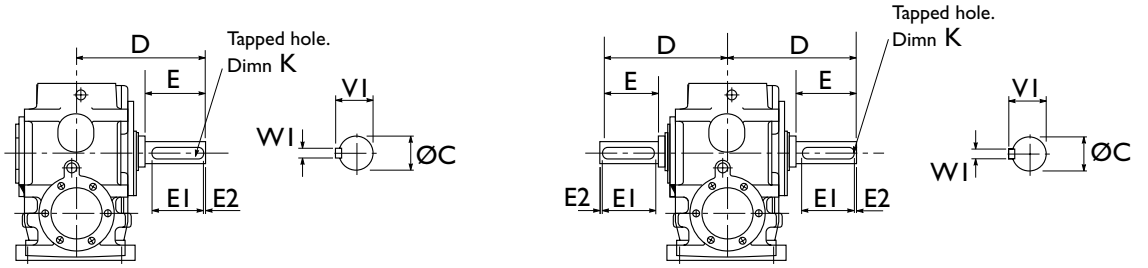

Size	A	B	C	C1	D	E	E1	E2	F	F1	H1	H2	J	K
C0720	180	26	60	45	195	76	70	3	M20 x 2.5, 34 deep	18	75	60	75	M16 x 2, 36 deep
C0820	225	28	70	60	255	120	110	3	M20 x 2.5, 34 deep	22	92	88	100	M20 x 2.5, 42 deep
C0920	280	40	90	70	295	135	125	3	M24 x 3, 45 deep	26	115	120	125	M20 x 2.5, 42 deep
C1020	335	65	100	90	366	170	160	3	M24 x 3, 45 deep	26	170	140	150	M24 x 3, 50 deep

Size	L	M	N1	N2	N3	N4	P1	Q1	Q2	R	S	T	U	V	V1	W	W1	Y2
C0720	67	50	109	79	60.5	188	124.5	108.5	93.5	92.5	122	143	28	64.6	48.5	18	14	107.5
C0820	80	60	125	90	70.5	220	143	132	128	125	150	168	35	75.1	64	20	18	125
C0920	85	67.5	150	107.5	90.5	265	169	157.5	162.5	152.5	177	195	40	95.6	74.5	25	20	145
C1020	110	75	175	132.5	100.5	313	198	225	195	180	230	235	45	106.6	95	28	25	172.5

Motors		All Sizes				C0720			C0820			C0920			C1020		
		ko	g	g1	g2	g6	k	kb	g6	k	kb	g6	k	kb	g6	k	kb
Motor Frame Size	80	230	158	118	190	120	617	667	200	700	750	200	783	833	-	-	-
	90S/L	270	177	149	218	140	667	726	200	740	799	200	823	882	-	-	-
	100/112	340	197	159	238	160	760	828	250	816	884	250	899	967	250	977	1045
	132	402	253	184	288	200	824	895	300	878	949	300	961	1032	300	1039	1110
	160/180	538	314	230	-	350	990	♦	350	1044	♦	350	1132	♦	350	1210	♦
	180L	613	354	257	-	-	-	-	-	-	-	350	1207	♦	350	1285	♦
	200	613	354	257	-	-	-	-	-	-	-	400	1207	♦	400	1285	♦
	225	690	411	280	-	-	-	-	-	-	-	450	1311	♦	450	1389	♦

ØC1 *≤ 50mm k6* *kb - for brake motor* *♦ Consult Power Jacks Ltd.*
> 50mm m6 *g2 - hand release if required*

Dimensions subject to change without notice.

5.3. In-Line Helical Reduction Gearboxes

5.3.1. Gearbox Selection

Calculate the power capacity required for the gearbox:

$P(kW) = P_d\ (kW) \times F_L$

Where P_d = Power required to drive the machine and F_L = Load factor (refer to table in Section 5.2.2.)

Select a gearbox type to the closest above the required power (P_d) and to the nearest output speed (hence gear ratio) for the gearbox type.

5.3.2. In-Line Helical Reduction Gearbox Power Rating Guide by Motor Frame Size

5.3.2.1. In-Line Helical Reduction Gearbox Gear Ratios

Double reduction gear ratios only. For single, triple or other reductiond consult Power Jacks.

Unit Size	M0122		M0222		M0322		M0422		M0522		M0622		M0722		M0822		M0921		M1021		M1321			M1421		
	Ratio		Ratio		Ratio		Ratio		Ratio		Ratio		Ratio		Ratio		Ratio		Ratio		Ratio			Ratio		
Motor Frame Size	3.6 to 9.0	11 to 56	3.6 to 14	16 to 56	3.6 to 14	16 to 56	3.6 to 11	12 to 56	3.6 to 11	12 to 56	5.0 to 12	14 to 63	3.6 to 9.0	11 to 56	3.6 to 14	16 to 56	1.4 to 14	16 to 71	1.4 to 14	16 to 71	2.8 to 14	16 to 45	50 to 71	2.8 to 14	16 to 45	50 to 71
63	X	X	-	X	-	X	-	X	-	X	-	X	-	-	-	-	-	-	-	-	-	-	-	-	-	-
71	X	X	-	X	-	X	-	X	-	X	-	X	-	-	-	-	-	-	-	-	-	-	-	-	-	-
80	X	X	X	X	X	X	X	X	X	X	X	X	-	X	-	X	-	X	-	-	-	-	-	-	-	-
90	X	X	X	X	X	X	X	X	X	X	X	X	-	X	-	X	-	X	-	-	-	-	-	-	-	-
100	-	-	-	-	-	-	X	X	X	X	X	X	X	X	X	X	-	X	-	X	-	X	X	-	X	X
112	-	-	-	-	-	-	X	X	X	X	X	X	X	X	X	X	-	X	-	X	-	X	X	-	X	X
132	-	-	-	-	-	-	X	X	X	X	X	X	X	X	X	X	-	X	-	X	-	X	X	-	X	X
160	-	-	-	-	-	-	-	-	-	-	-	-	X	X	X	X	X	X	X	X	X	X	X	X	X	X
180	-	-	-	-	-	-	-	-	-	-	-	-	-	-	-	-	X	X	X	X	X	X	X	X	X	X
200	-	-	-	-	-	-	-	-	-	-	-	-	-	-	-	-	X	X	X	X	X	X	X	X	X	X
225	-	-	-	-	-	-	-	-	-	-	-	-	-	-	-	-	X	X	X	X	X	X	X	X	X	X
250	-	-	-	-	-	-	-	-	-	-	-	-	-	-	-	-	-	-	-	-	X	X	-	X	X	-
280	-	-	-	-	-	-	-	-	-	-	-	-	-	-	-	-	-	-	-	-	X	X	-	X	X	-

5.3.2.2. Overview of Motor Power Ratings

4 Pole AC Induction Motors - 3 Phase

Frame Size	63	71	80	90	100	112	132	160	180	200	225	250	280
Power (kW)	0.12	0.25	0.55	1.1	2.2	4	5.5	11	18.5	30	37	55	75
	0.18	0.37	0.75	1.5	3		7.5	15	22		45		90

6 Pole AC Induction Motors - 3 Phase

Frame Size	63	71	80	90	100	112	132	160	180	200	225	250	280
Power (kW)	0.07	0.12	0.37	0.75	1.5	2.2	3	7.5	15	18.5	30	37	45
	0.09	0.18	0.55	1.1			4	11		22			55
		0.25					5.5						

5.3.3. In-Line Helical Gearbox Torque Ratings

Gearbox output torque ratings below are applicable when used with 1450 rpm (4 pole), 960 rpm (6 pole) and 725 rpm (8 pole) motors. Double reduction gear ratios only. For single, triple or other reductions consult Power Jacks.

GR	M0122		M0222		M0322		M0422		M0522		M0622		M0722		M0822		M0921		M1021		M1321		M1421	
	i	M2	i	M2	i	M2	i	M2	i	M2	i	M2	i	M2	i	M2	i	M2	i	M2	i	M2	i	M2
	(:1)	(Nm)	(:1)	(Nm)	(:1)	(Nm)	(:1)	(Nm)	(:1)	(Nm)	(:1)	(Nm)	(:1)	(Nm)	(:1)	(Nm)	(:1)	(Nm)	(:1)	(Nm)	(:1)	(Nm)	(:1)	(Nm)
1.4																	1.479	574	1.442	722				
1.5																	2.036	677	2.015	1010				
2.2																	2.282	716	2.191	1100				
2.5																	2.562	756	2.489	1250				
2.8																	2.969	1150	2.992	1490	2.904	1810	2.888	2520
3.2																	3.301	850	3.242	1570	3.189	1990	3.247	2840
3.5	3.75	59	3.589	100	3.589	118	3.585	203	3.585	292			3.678	306	3.678	483	3.688	876	3.5	1570	3.638	2260	3.822	3330
4																	4.088	1360	4.179	2090	4.025	2510	4.029	3530
4.5																	4.582	1440	4.545	2280	4.421	2760	4.537	3970
5	5.066	68	5.034	116	5.034	135	5.04	237	5.04	382	4.438	362	5.094	425	5.214	686	5.073	1680	4.938	2470	5.042	3140	5.333	4660
5.6	5.762	71	5.547	121	5.547	140	5.649	249	5.649	409	6.24	473	5.722	477	5.792	763	5.686	1780	5.37	2690	5.538	3450	6.005	5240
6.3	6.528	75	6.299	127	6.299	147	6.341	262	6.341	413	6.994	510	6.292	525	6.442	849	6.628	1700	6.724	3140	6.21	3880	6.548	5730
7.1																	7.404	1760	7.26	3230	6.879	4300	7.27	6360
8	8.348	79	8	136	8	161	8.053	289	8.053	441	7.851	512	8.218	655	8.33	1100	8.224	2080	7.945	3330	7.779	4840	8.667	7570
9	8.997	80	9.088	140	9.088	168	9.129	299	9.129	450	9.97	594	9.344	689	9.352	1220	9.188	2170	8.578	3420	8.618	5360	9.623	8400
10																	10.27	1970	10.59	3680	9.891	6170	10.07	8800
11	11.36	84	11.15	145	11.15	179	10.89	311	10.89	450	11.3	604	11.35	726	11.47	1310	11.71	2040	11.98	3770	11.2	5940	11.43	9980
12	12.88	87	12.37	148	12.37	186	12.54	320	12.54	426	13.48	613	12.48	740	12.92	1340								
14	14.72	90	14.05	153	14.05	194	14.58	329	14.58	450	15.52	528	14.34	761	15.04	1410								
16	16.37	90	15.97	160	15.97	205	16.31	338	16.31	450	18.05	596	16.26	786	16.69	1420								
18	18.05	90	17.58	160	17.58	208	17.39	338	17.39	450	20.2	626	17.94	794	18.26	1360								
20	19.86	90	20.23	160	20.23	209	20.61	338	20.61	450	21.53	626	20.54	804	20.66	1460								
22	23.27	90	21.99	160	21.99	209	22	338	22	450	25.51	626	23.23	813	23.32	1540								
28	27.92	90	26.4	160	26.4	209	27.3	338	27.3	450	27.24	626	26.93	825	28.27	1580								
32	32.54	90	31.68	160	31.68	209	32.19	338	32.19	450	33.8	626	32.12	840	32.97	1620								
36	36.16	90	35.69	160	35.69	209	35.25	338	35.25	450	39.86	626	35.17	847	36.21	1650								
45	43.54	84	41.49	160	41.49	199	43.2	338	43.2	424	43.64	626	42.21	863	44.38	1690								
50	49.91	72	47.09	160	47.09	203	48.15	338	48.15	379	53.49	526	48.56	700	48.46	1690								
58	56.72	71	53.54	160	53.54	206	54	270	54	270	59.61	470	53.96	596	55.8	1540								
63											66.86	334												

Note: *Power Ratings (kW) = (2*π*M2*Nl)/(i*60*1000).*
M2 = Maximum output torque rating in Nm.
N1 = Motor input power to gearbox in rpm.
i = Gear Ratio.
GR = Nominal Gear Ratio.

5.3.4. In-Line Helical Gearbox Dimensions - Foot Mounted

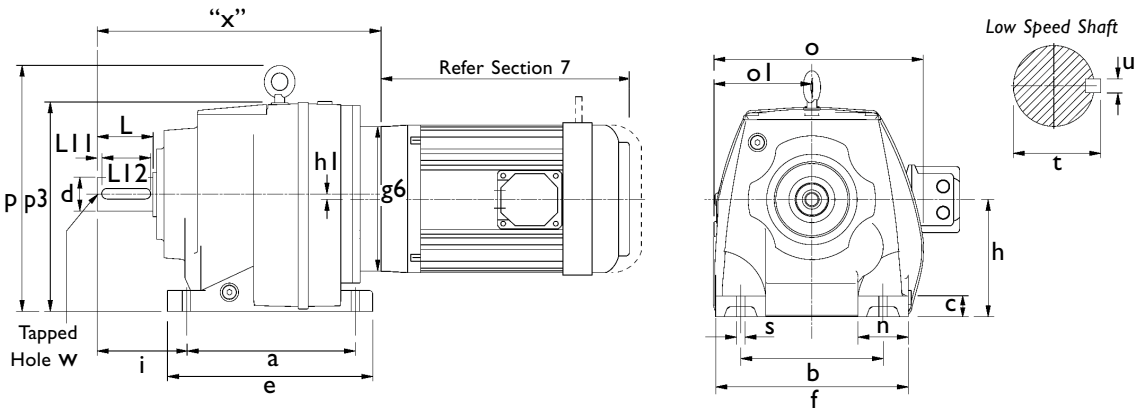

Size	a	b	c	e	f	h	h1	i	n	o	o1	p	p3	Øs	Ød	L	L11	L12	t	u	w
M0122	110	110	12	131	135	75	-	58	25	152	76	-	149	10	20 k6	40	4	32	22.5	6	M6 x 1 x 16 deep
M0222	130	110	16	152	145	90	-	75	35	170	84	-	180	10	25 k6	50	4	40	28	8	M10 x 1.5 x 22 deep
M0322	130	110	16	152	145	90	-	75	35	170	84	-	180	10	25 k6	50	4	40	28	8	M10 x 1.5 x 22 deep
M0422	165	135	20	200	190	115	-	90	55	204	97	-	208	15	30 k6	60	4	50	33	8	M10 x 1.5 x 22 deep
M0522	165	135	20	200	190	115	-	100	55	204	97	-	208	15	35 k6	70	7	60	38	10	M12 x 1.75 x 28 deep
M0622	195	150	24	235	210	130	14.5	100	60	220	110	246	214	15	35 k6	70	7	60	38	10	M12 x 1.75 x 28 deep
M0722	205	170	25	245	230	140	-	115	60	252	119	295	250	19	40 k6	80	5	70	43	12	M16 x 2.0 x 36 deep
M0822	260	215	35	310	290	180	-	140	75	320	167	360	310	19	50 k6	100	10	80	53.5	14	M16 x 2.0 x 36 deep
M0921	310	250	40	365	340	225	-	160	90	372	200	433	394	23	60 m6	120	10	100	64	18	M20 x 2.5 x 42 deep
M1021	370	290	45	440	400	250	-	185	110	428	225	505	446	27	70 m6	140	15	110	74.5	20	M20 x 2.5 x 42 deep
M1321	410	340	50	490	450	265	-	220	110	470	242	563	483	34	90 m6	170	15	140	95	25	M24 x 3.0 x 50 deep
M1421	500	380	50	590	530	300	-	260	150	546	278	630	551	41	100 m6	210	15	180	106	28	M24 x 3.0 x 50 deep

"x"	63	71	80A	80B	90S	90L	90LA	100L	112M	112MA	132SA	132M	132MA	132MB	160M	160L	180M	180L	200L	225S	225M	250M	280S	280M
M0122	209	213	226	226	236	236	236																	
M0222	240	244	257	257	267	267	267																	
M0322	240	244	257	257	267	267	267																	
M0422			294	294	304	304	304	329	329	329														
M0522			304	304	314	314	314	339	339	339														
M0622			325	325	335	335	335	360	360	360														
M0722			362	362	372	372	372	382	382	382	384	384	384	384										
M0822			442	442	442	442	442	442	442	442	442	442	442	442	448	448								
M0921			524	523	523	523	523	523	523	523	523	523	523	523	564	564	564	564	564	591	591			
M1021								596	596	596	596	596	596	596	631	631	631	631	631	658	658			
M1321								717	717	717	717	717	717	717	710	710	710	710	710	710	710	710	710	710
M1421								832	832	832	832	832	832	832	825	825	825	825	825	825	825	825	825	825

Frame	63	71	80A	80B	90S	90L	90LA	100L	112M	112MA	132SA	132M	132MA	132MB	160M	160L	180M	180L	200L	225S	225M	250M	280S	280M
Øg6	140	105	120	120	140	140	140	160	160	160	200	200	200	200	350	350	350	350	400	450	450	550	550	550

Note: *All dimensions in millimeters.*
Dimensions subject to change without notice.
All parallel keys are to DIN 6885.

5.3.5. In-Line Helical Gearbox Dimensions - Flange Mounted

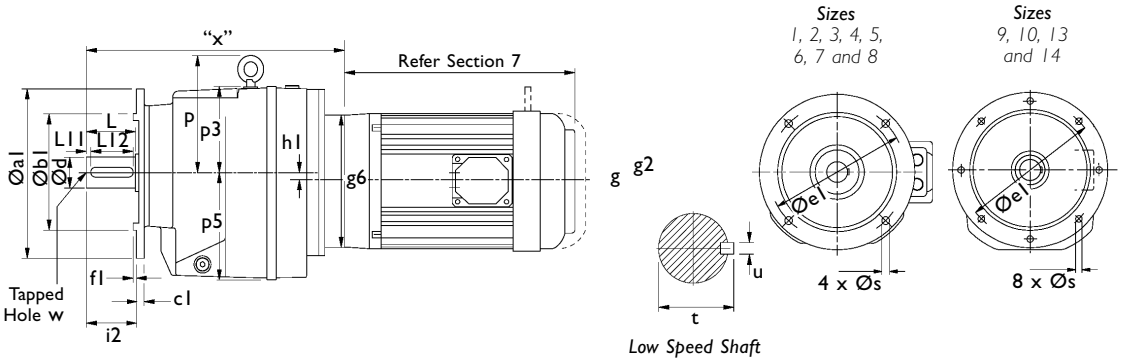

Note: *Sizes 01 to 08 are also available as C - Flange (B14) Mounting, please consult Power Jacks for details.*

Size	øa1	øb1	c1	øe1	f1	h1	i2	p	p3	p5	Øs	Ød	L	L11	L12	t	u	w
M0122	120	80	9	100	3	-	40	-	74	76	9	20 k6	40	4	32	22.5	6	M6 x 1 x 16 deep
	140	95	9	115	3	-	40	-	74	76	9	20 k6	40	4	32	22.5	6	M6 x 1 x 16 deep
	160	110	10	130	3.5	-	40	-	74	76	9	20 k6	40	4	32	22.5	6	M6 x 1 x 16 deep
	200	130	10	165	3.5	-	40	-	74	76	11	20 k6	40	4	32	22.5	6	M6 x 1 x 16 deep
M0222	120	80	10	100	3	-	50	-	90	91	6.6	25 k6	50	4	40	28	8	M10 x 1.5 x 22 deep
	140	95	10	115	3	-	50	-	90	91	9	25 k6	50	4	40	28	8	M10 x 1.5 x 22 deep
	160	110	10	130	3.5	-	50	-	90	91	9	25 k6	50	4	40	28	8	M10 x 1.5 x 22 deep
	200	130	10	165	3.5	-	50	-	90	91	11	25 k6	50	4	40	28	8	M10 x 1.5 x 22 deep
M0322	120	80	10	100	3	-	50	-	90	91	6.6	25 k6	50	4	40	28	8	M10 x 1.5 x 22 deep
	140	95	10	115	3	-	50	-	90	91	9	25 k6	50	4	40	28	8	M10 x 1.5 x 22 deep
	160	110	10	130	3.5	-	50	-	90	91	9	25 k6	50	4	40	28	8	M10 x 1.5 x 22 deep
	200	130	10	165	3.5	-	50	-	90	91	11	25 k6	50	4	40	28	8	M10 x 1.5 x 22 deep
M0422	140	95	11	115	3	-	60	-	93	115	9	30 k6	60	4	50	33	8	M10 x 1.5 x 22 deep
	160	110	11	130	3.5	-	60	-	93	115	9	30 k6	60	4	50	33	8	M10 x 1.5 x 22 deep
	200	130	11	165	3.5	-	60	-	93	115	11	30 k6	60	4	50	33	8	M10 x 1.5 x 22 deep
	250	180	11	215	4	-	60	-	93	115	13.5	30 k6	60	4	50	33	8	M10 x 1.5 x 22 deep
M0522	140	95	11	115	3	-	70	-	93	115	9	35 k6	70	7	60	38	10	M12 x 1.75 x 28 deep
	160	110	11	130	3.5	-	70	-	93	115	9	35 k6	70	7	60	38	10	M12 x 1.75 x 28 deep
	200	130	11	165	3.5	-	70	-	93	115	11	35 k6	70	7	60	38	10	M12 x 1.75 x 28 deep
	250	180	11	215	4	-	70	-	93	115	13.5	35 k6	70	7	60	38	10	M12 x 1.75 x 28 deep
M0622	200	130	11	165	4	14.5	70	116	84	130	11	35 k6	70	7	60	38	10	M12 x 1.75 x 28 deep
	250	180	11	215	4	14.5	70	116	84	130	13.5	35 k6	70	7	60	38	10	M12 x 1.75 x 28 deep
	300	230	11	265	4	14.5	70	116	84	130	13.5	35 k6	70	7	60	38	10	M12 x 1.75 x 28 deep
M0722	200	130	11	165	3.5	-	80	155	110	140	11	40 k6	80	5	70	43	12	M16 x 2.0 x 36 deep
	250	180	11	215	4	-	80	155	110	140	13.5	40 k6	80	5	70	43	12	M16 x 2.0 x 36 deep
	300	230	11	265	4	-	80	155	110	140	13.5	40 k6	80	5	70	43	12	M16 x 2.0 x 36 deep
M0822	300	230	17	265	4	-	100	180	130	182	13.5	50 k6	100	10	80	53.5	14	M16 x 2.0 x 36 deep
	350	250	17	300	5	-	100	180	130	182	17.5	50 k6	100	10	80	53.5	14	M16 x 2.0 x 36 deep
M0921	450	350	18	400	5	-	140	198	-	230	18	60 m6	120	10	100	64	18	M20 x 2.5 42 deep
M1021	450	350	22	400	5	-	140	245	-	260	18	70 m6	140	15	110	74.5	20	M20 x 2.5 42 deep
M1321	550	450	25	500	5	-	170	288	-	278	18	90 m6	170	15	140	95	25	M24 x 3.0 50 deep
M1421	550	450	25	500	5	-	210	320	-	318	18	100 m6	210	15	180	106	28	M24 x 3.0 50 deep

	Motor Frame Size																						
"x"	63	71	80A	80B	90S	90L	90LA	100L	112M	112MA	132M	132MA	132MB	160M	160L	180M	180L	200L	225S	225M	250M	280S	280M
M0122	209	213	226	226	236	236	236																
M0222	240	244	257	257	267	267	267																
M0322	240	244	257	257	267	267	267																
M0422			294	294	304	304	304	329	329	329													
M0522			304	304	314	314	314	339	339	339													
M0622			325	325	335	335	335	360	360	360													
M0722			362	362	372	372	372	382	382	382	384	384	384										
M0822			442	442	442	442	442	442	442	442	442	442	442	448	448								
M0921			523	523	523	523	523	523	523	523	523	523	523	564	564	564	564	564	591	591			
M1021								596	596	596	596	596	596	631	631	631	631	631	658	658			
M1321								717	717	717	717	717	717	710	710	710	710	710	710	710	710	710	710
M1421								832	832	832	832	832	832	825	825	825	825	825	825	825	825	825	825

Frame	63	71	80A	80B	90S	90L	90LA	100L	112M	112MA	132M	132MA	132MB	160M	160L	180M	180L	200L	225S	225M	250M	280S	280M
Øg6	140	105	120	120	140	140	140	160	160	160	200	200	200	350	350	350	350	400	450	450	550	550	550

Note: *All dimensions in millimeters.*
Dimensions subject to change without notice.
All parallel keys are to DIN 6885.

POWER JACKS Group
manufacturers of precision screw jacks, actuators and gearboxes

Section 6.1.1. - Flexible JAW Coupling

15 Models, Curved Jaw Design
Reliable, rugged and compact
No need for lubrication
Grease and oil resistant
Bores sizes up to 110 mm
Torque ratings: up to 3300 Nm

Section 6.1.2. - Flexible Spacer Coupling

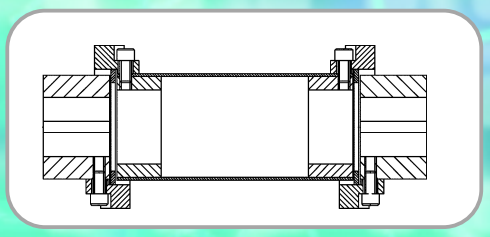

7 Model sizes
Compact, light and robust
2 Metal Hubs and flexible element
Easy to install and maintain
Bores sizes up to 80 mm
Torque ratings: up to 2000 Nm

6. couplings and **drive shafts**

Section 6.1.3. - Steel Flexible Gear Couplings

Flanged or Continuous Sleeve Models
Flex-Flex and Flex-Rigid configurations
Strong, rugged Steel Couplings
High transmittable torque and high maximum speed
Bores sizes up to 130 mm
Torque ratings: up to 20700 Nm

Section 6.2.1. - Drive Shafts
Section 6.2.2. - Plummer Blocks
Section 6.2.3. - Hand Wheels

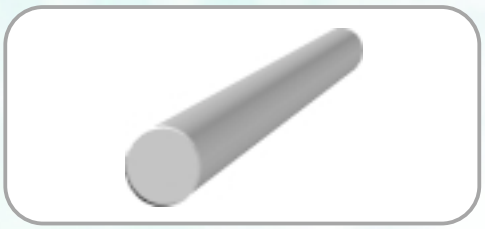

Drive Shafts

Standard Drive Shafts with Machine Journals and Keyways
Drive Shaft ends can be machined to customer design
3 Standard sizes with others on request

Plummer Blocks

Rugged, strong, cast iron Plummer Blocks
Floating or Locating Bearings
One Piece and Split Housing Designs

Hand Wheels

Rugged, lightweight Hand Wheels
Suitable for manual operation of Gearboxes or Screw Jacks

Contents

6.1. Jaw and Geared Flexible Couplings

Selection of Coupling Type

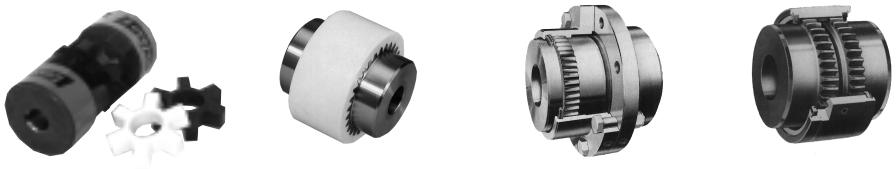

The selection of coupling type depends on the installation and the type of misalignment. The three main types of misalignment encountered are:-

1. Angular Misalignment is usually present to some extent on all applications, typical values 1° - 2°. Sometimes higher values are necessary.
2. Parallel (Radial) Misalignment is also nearly always present. A well aligned installation might have values below 0.25 mm.
3. Axial Misalignment (End Float) sometimes caused by thermal expansion or as a result of machine design.

Other considerations include:

- Backlash Free Couplings are either one part couplings or have bolted joints. These are effective for precise positioning and to avoid wear on reversing drives.
- Torsional rigidity of couplings depends on the joining method. Types with rubber or plastic elements can be considered as torsionally soft and will have an amount of twist at rated torque.

Procedure:

1. Decide if the coupling should be torsionally soft or rigid.
2. Consider whether a small amount of backlash is acceptable.
3. Calculate the required coupling torque.
4. Make a provisional selection.
5. Check that the coupling's maximum speed is sufficient.
6. Check that the coupling's dimensions are acceptable.
7. Contact Power Jacks with your order or technical enquiry

Selection of Coupling Size

$$\text{Coupling Torque, T(Nm)} = \frac{9550 * \text{Power Transmitted (kW)} * S}{\text{RPM}}$$

where S = Service Factor - dependant on drive conditions (refer to each coupling)

Select the coupling which is rated above the calculated torque. If a brake is present in the system the coupling should be based on either the brake torque or the transmitted torque whichever is greater.

General Notes

1. Maximum misalignment values are extremes and should not be combined. As operating misalignment approaches the maximum, torque and power ratings should be reduced to maintain life.
2. Gear couplings accommodate parallel misalignment by converting it to angular misalignment at the gear meshes in the flexible halves of the coupling.
3. The maximum axial misalignment values apply when the coupling is aligned. If axial misalignment greater than the listed maximum is required, consult Power Jacks.
4. The inertia values includes shafts through the bores.
5. When ordering please quote the coupling size and type, specify the bore and keyway sizes, and advise if puller holes or set-screws are required.
6. For maximum performance, the actuators, shafts, gear boxes and motor should be carefully aligned.
7. Imperial couplings on request..

Keyways	Metric	Imperial
Standard Bores	B.S. 4500 1969 H7	B.S. 1916 Part 1 1953 K7
Standard Keyways	B.S. 4235 Part 1 1967 P9	B.S. 46 Part 1 1958

6.1.1. Jaw Type Flexible Coupling

- Curved jaw design.
- No need for lubrication.
- Quick and simple to install.
- Reliable, rugged and compact.
- Smooth, silent action.
- High power transmission density.
- 4 Standard spider types available.
- Elastomeric element resistant to heat (-40°→+90°c), grease, oil and chemical agents.
- Hubs in aluminium and sintered iron.

Size		14	19/24	24/30	28/38	38/45	42/55	48/60	55/70	65/75	75/90	90/100	100/110
Torque (Nm)	Nominal, T_{kn}	P	10	35	95	190	265	310	375	425	975	2400	3300
	Max T_{kmax}	P	20	70	190	380	530	620	750	850	1950	4800	6600
	Vibrating T_{kw} (10Hz)	P	2.6	9	25	49	69	81	93	111	254	624	858
Misalignment Values	Axial (mm)	P	1.2	1.4	1.5	1.8	2	2.1	2.2	2.6	3	3.4	3.8
	Angular (deg)	P	0.9	0.9	0.9	1	1	1.1	1.1	1.2	1.2	1.2	1.2
	Radial (mm)	P	0.2	0.22	0.25	0.28	0.32	0.36	0.38	0.42	0.48	0.5	0.52
Speed	Max (rpm)	P	14000	10600	8500	7100	6000	5600	4750	4250	3550	2800	2500

Note *All couplings use 92 Shore elastomeric element (white) as standard. 80, 98 and 95 available on request.*
Maximum torque must not be exceeded during start-up operation.
More accurate alignment will increase coupling life and reduce vibration. Dimensions "E" and "L" must be observed.
P = Consult Power Jacks for more details.

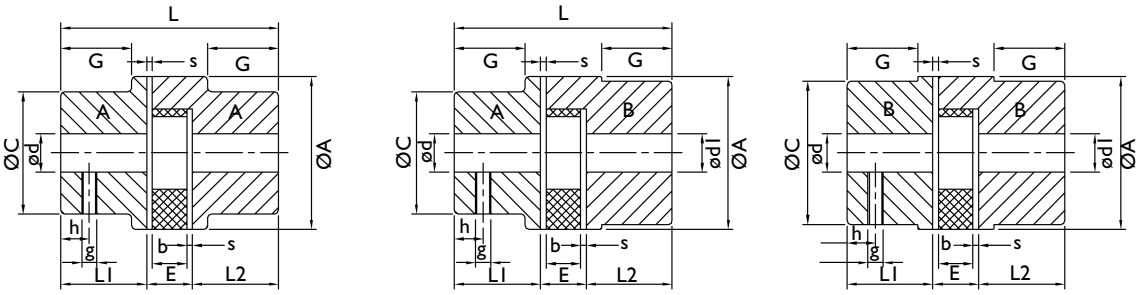

Type	Hub 'A'			Hub 'B'			Dimensions (mm)												
	Pre Bore	Min Bore	Max Bore	Pre Bore	Min Bore	Max Bore	A	C	C1	L	L1 & L2	E	s	b	G	F	g	h	Weight kg
Aluminimum Hub Couplings																			
19/24	6	6	19	18	20	24	40	31	38	66	25	16	2	12	20	18	M5	10	0.11
24/30	6	8	24	22	25	30	55	39	48	78	30	18	2	14	24	27	M5	10	0.24
28/38	9	10	28	26	30	38	65	46	61	90	35	20	2.5	15	28	30	M6	15	0.42
38/45	12	14	38	36	40	45	80	64	75	114	45	24	3	18	38	38	M6	15	0.86
Cast Iron Hub Couplings																			
19/24	-	-	-	-	6	24	40	-	40	66	25	16	2	12	-	18	M5	10	0.34
24/30	-	-	-	-	8	32	55	-	55	78	30	18	2	14	-	27	M5	10	0.9
28/38	-	-	-	-	10	38	65	-	65	90	35	20	2.5	15	-	30	M6	15	1.5
38/45	-	14	38	-	40	45	80	66	78	114	45	24	3	18	37	38	M8	15	2.35
42/55	-	16	42	-	45	55	95	75	93	126	50	26	3	20	40	46	M8	20	3.55
48/60	-	19	48	-	50	60	105	85	103	140	56	28	3.5	21	45	51	M8	20	4.85
55/70	-	22	55	53	60	70	120	98	118	160	65	30	4	22	52	60	M10	20	7.4
65/75	-	25	65	63	70	75	135	115	133	185	75	35	4.5	26	61	68	M10	20	10.8
75/90	-	30	75	73	80	90	160	135	158	210	85	40	5	30	69	80	M10	25	17.7
90/100	-	-	-	-	45	100	200	-	170	245	100	45	5.5	34	81	100	M10	25	29.6
100/110	-	-	-	-	45	110	225	-	180	270	110	50	6	38	89	113	M12	30	39

Note *Weight of min. bored coupling with standard A/B hub combination.*
All couplings metric bored and keyed as standard. Consult Power Jacks for standard bore sizes and specials.

Service Factor $S = F_t * F_z * F_s$

Temperature (°C)	-30°C to +30°C	40°C	60°C	80°C
Temperature Factor (F_t)	1	1.2	1.4	1.8

Starts/Day	0 to 10	101 to 200	201 to 400	401 to 800
Starting Factor (F_z)	1	1.2	1.4	1.8

Shock Type	None	Light	Medium	High
Shock Factor (F_s)	1	1.5	1.8	2.5

6.1.2. Flexible Spacer Couplings

- Compact, light, robust, safe in operation, long service life.
- Two identical hubs and one flexible element.
- Hubs of high tensile steel.
- Large permissible bores, various hub lengths.
- Driving dogs have smooth surface, high durability.
- Generously proportioned compression-stressed flexible inserts.
- Damps vibrations and shocks, compensates for axial, radial and angular misalignment.

Elastomeric Element features:

- Inserts made of "90 Shore A" Polyurethane (G) as standard or tough "55 Shore D" Hytrel (H).
- Operating temperature range: -40°C → +80°C as standard
- Elastomeric element is resistant to oil and grease.

Coupling Performance

Type	B-G			B-H-G			Max Speed
Size	Nominal Torque T_{KN} (Nm)	Maximum Torque T_{Kmax} (Nm)	Torsional Angle (deg) at T_{KN}	Nominal Torque T_{KN} (Nm)	Maximum Torque T_{Kmax} (Nm)	Torsional Angle (deg) at T_{KN}	N_{max} (rpm) Elastomeric Element
72	32	64	4	45	80	2,5	10000
76	63	125	4	90	125	2,5	9000
98	125	250	4	175	280	2,5	7500
120	250	500	4	350	560	2,5	6000
138	400	800	4	560	900	2,5	5000
165	600	1200	4	850	1700	2,5	4000
185	1000	2000	4	1400	2800	2,5	3600

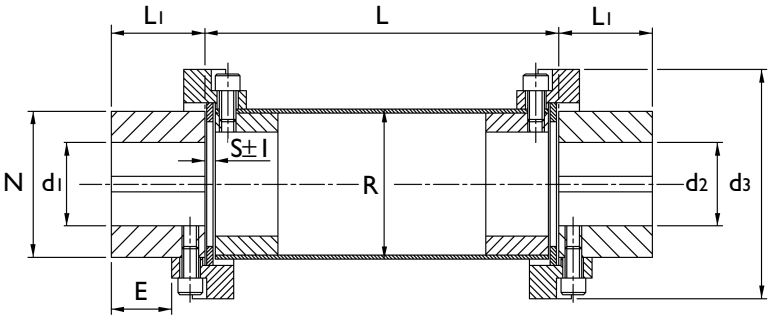

Coupling Dimensions

Size	d min (d1, d2)	d max (d1, d2)	d3	E	L1	N	R	S +/- 1	Model
72	9	30	72	14	28	50	45	6	CF-B-(H)-72-G-L=*
76	12	30	76	16	30	50	45	6	CF-B-(H)-76-G-L=*
98	12	38	98	24	42	61	60	6	CF-B-(H)-98-G-L=*
120	15	48	120	28	50	71	70	6	CF-B-(H)-120-G-L=*
138	15	55	138	30	55	86	85	6	CF-B-(H)-138-G-L=*
165	20	65	165	36	65	100	100	8	CF-B-(H)-165-G-L=*
185	30	80	185	45	80	115	115	10	CF-B-(H)-185-G-L=*

Note *All dimensions in mm. *Insert length L here in millimetres.*

Misalignment

Element Type	Radial (mm)	Axial (mm)	Angular (deg)
B - Standard	0.5	+/- 1	1
H - Hytrel	0.25	+/- 1	0.5

Note *The best possible alignment will result in the best coupling performance.*

Service Factor

The service factor must be chosen according to working conditions between 1 (light duty) and 3 (arduous duty).

Critical Speed & Spacer length

Spacer coupling lengths can be provided up to a maximum of 6m depending on rotational speed. For advice on the critical speed of a given coupling consult Power Jacks.

6.1.3. Steel Flexible Gear Couplings

Nature of Load on Unit	Uniform	Light Shock	Medium Shock	Heavy Shock
Service Factor, S	1.0	1.25	1.50	2.0

Note
1. *All dimensions in millimetres.*
2. *Dimension 'R 'and 'CAC' are the clearance required to align the coupling when installing.*
3. *These couplings are designed for grease lubrication. A list of suggested lubricants and quantities is detailed in the installation manual supplied with each full coupling.*
4. *Where a coupling is exposed to sustained temperatures above 100°C (212°F) a coupling with high temperature seals must be used, consult Power Jacks Ltd.*

6.1.3.1. Continuous Sleeve Steel Gear Coupling

- Vari-crown tooth form for improved torque transmission and longer life.
- Strong compact design.
- High transmittable torque ratings.
- Low inertia and high maximum speeds.
- Steel reinforced high misalignment seals.
- Spacer couplings available on request.

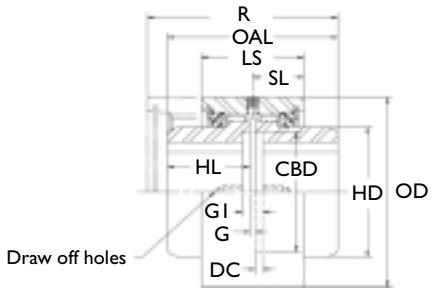

Full-Flex Gear Coupling

Two flexible hubs and sleeve assembly.
Accommodates angular, parallel and axial misalignments.

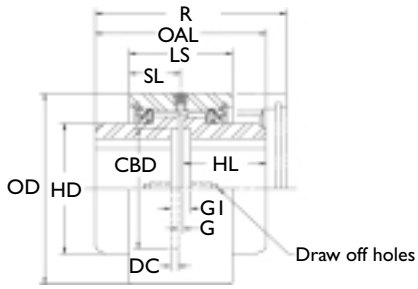

Flex-Rigid Gear Coupling

Flexible and rigid hub assembly. The flexible hub is standard and the rigid hub is splined into the sleeve.
Accommodates angular and axial misalignment only.

Coupling Size and Type		Full-Flex	CFF022	CFF038	CFF050	CFF065	CFF075	CFF090	CFF100	CFF115
		Flex-Rigid	CFR022	CFR038	CFR050	CFR065	CFR075	CFR090	CFR100	CFR115
Rated Torque (Nm)			285	854	2278	3417	5695	9967	14238	20787
Rated Power (kW/100 rpm)			3	8.9	23.8	35.8	59.6	104.4	149	217.7
Maximum Speed Unbalanced * (rpm)			6000	5000	4200	3750	3000	2800	2400	2200
Full	Maximum	Parallel	0.13	0.18	0.18	0.25	0.30	0.30	0.18	0.18
Flex	Misalignment	Angular	1°	1°	1°	1°	1°	1°	1°	1
		Axial (+/-)	0.3	0.3	0.3	0.6	0.6	0.6	0.6	0.6
Flex	Maximum	Angular	0.5°	0.5°	0.5°	0.5°	0.5°	0.5°	0.5°	0.5
Rigid	Misalignment	Axial (+/-)	0.3	0.3	0.3	0.6	0.6	0.6	0.6	0.6
Inertia		($kg\ m^2$)	0.002	0.004	0.010	0.022	0.053	0.112	0.225	0.376
Weight (Rough Bore)		(kg)	2.3	3.6	5.9	9.1	15	29	41	57
Maximum	Bore		31	42	56	70	84	97	111	130
	Keyway	(b x h)	8 x7	12 x 8	16 x 10	20 x 12	22 x 14	28 x 16	28 x 16	32 x 18
Rough Bore			11	15	18	22	30	32	44	60
DD			84	95	121	140	168	191	222	241
HD			51	60	83	100	121	137	159	184
HL			38	46	52	57	67	108	111	127
G			3	3	3	6	6	6	6	6
G1			10	13	13	19	19	19	19	19
OAL			80	95	108	121	140	222	229	260
R			95	117	124	145	175	235	241	264
LS			51	64	65	78	95	102	118	124
DC			3	5	5	6	6	6	6	6
CBD			49	57	76	95	121	140	165	184
SL			25	32	33	39	48	51	59	62

Note **Balanced speed approximately 3 times higher.*
Draw off holes are optional, consult Power Jacks.
All dimensions in millimetres.

6.1.3.2. Flanged Sleeve Steel Gear Coupling

- High transmittable torque ratings and high maximum speeds.
- Accommodates angular, parallel and axial misalignment.
- Strong forged steel hubs and sleeves.
- Vari-crown tooth form for improved torque transmission and longer life.
- Several mounting options available by reversing the hubs.
- Spacer gear couplings available. Consult Power Jacks.

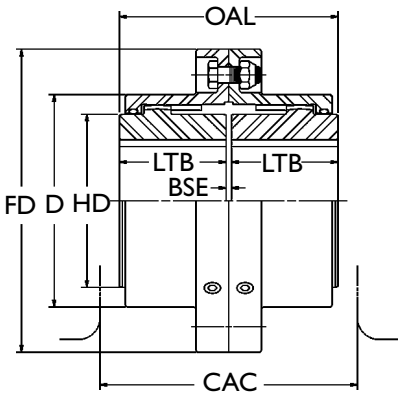

Full-Flex Gear Coupling

Two flexible hubs and sleeve assembly. Accommodates angular, parallel and axial misalignments.

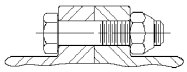

Exposed bolt design also available.

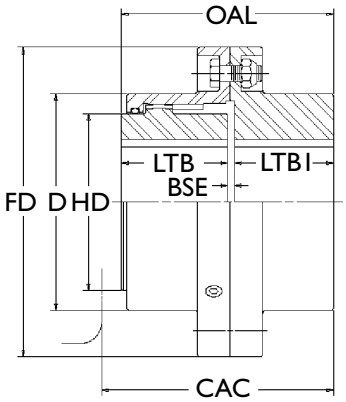

Flex-Rigid Gear Coupling

Flexible and rigid hub assembly. Accommodates angular and axial misalignment only.

Coupling Size and Type		Full-Flex	FFF025	FFF038	FFF050	FFF065	FFF075	FFF090	FFF100
		Flex-Rigid	FFR025	FFR038	FFR050	FFR065	FFR075	FFR090	FFR100
Rated Torque (Nm)			859	2136	3560	6407	10679	17086	24917
Rated Power (kW/100 rpm)			8.9	22.3	37.3	67.1	111.9	179	261
Maximum Speed Unbalanced * (rpm)			6000	5500	5000	4400	4000	3500	3000
Full Flex	Maximum Misalignment	Parallel	1.4	1.5	2.2	2.7	2.9	3.3	3.8
		Angular	3°	3°	3°	3°	3°	3°	3°
		Axial (per hub)	1.5	1.5	1.5	2.2	2.2	2.2	3.3
Flex Rigid	Maximum Misalignment	Angular	1.5°	1.5°	1.5°	1.5°	1.5°	1.5°	1.5°
		Axial (per hub)	1.5	1.5	1.5	2.2	2.2	2.2	3.3
Inertia ($kg.m^2$)		Full Flex	0.006	0.019	0.044	0.100	0.192	0.435	0.80
		Flex Rigid	0.006	0.020	0.044	0.106	0.203	0.446	0.831
Weight (Rough Bore) (kg)		Full Flex	4	9	15	25	36	59	86
		Flex Rigid	4	8	15	25	39	61	89
Maximum (Flexible Ends)	Bore		42	56	73	88	107	124	147
	Keyway	(b x h)	12 x 8	16 x 10	20 x 12	25 x 14	28 x 16	32 x 18	36 x 20
Maximum (Rigid End)	Bore		56	76	95	114	134	150	176
	Keyway	(b x h)	16 x 10	20 x 12	25 x 14	32 x 18	36 x 20	36 x 20	45 x 25
Rough Bore		FF	11	18	24	37	37	46	62
		FR	Solid with Centre						
OAL			89	102	127	159	187	219	248
FD			116	152	178	213	240	279	318
D			78	101	125	150	176	201	235
HD			59	76	102	118	143	165	191
LTB			43	49	62	77	91	106	121
LTB1			40	47	58	74	87	101	113
BSE		FF	3	3	3	5	5	6	6
		FR	4	4	4	5	5	6	8
OAL		FF	89	102	127	159	187	219	248
		FR	87	100	124	156	183	213	241
CAC		FF	106	121	152	181	207	238	260
		FR	95	109	137	167	192	222	248
Flange Thickness per Hub			14	19	19	22.5	22.5	29	29

Note **Balanced speed approximately 3 times higher. Consult Power Jacks for details.*
Draw off holes are optional, consult Power Jacks.
All dimensions in millimetres.

6.2. Drive Shafts and Plummer Blocks

6.2.1. Selection Guidelines

1. Select Drive Shaft Diameter

Select a standard drive shaft from the drive shaft table (refer 6.2.1.1.) and check its torque rating and angle of twist rating against the application requirements.

if Transmitted Torque (Nm) < Maximum Drive Shaft Torque (Nm)

&

if Acceptable Angle of Twist (Deg.) for shaft length < Rated Angle of Twist for Drive Shaft (Deg.)
then drive shaft diameter selected is acceptable.

2. Check Drive Shaft Critical Speed

For the unsupported shaft length calculate the drive shaft critical speed for the support conditions required (refer 6.2.1.2.).

If Shaft Speed (rpm) < Drive Shaft Critical Speed (rpm)
then drive shaft selection and configuration is acceptable.

2(a). Plummer Block Selection

If the drive shaft fails due to the critical speed reduce the unsupported drive shaft length using plummer blocks.

e.g. one plummer block at each end of the drive shaft and one in the middle, reducing the unsupported length to half the total drive shaft length.

Select a plummer block from the table relating to the appropriate shaft diameter size (refer 6.2.2.).

Re-calculate the critical speed for the new unsupported length and check for acceptability.

If space constraints restrict the number of plummer blocks and the drive shaft fails on the critical speed try increasing the shaft diameter to the next size up or consult Power Jacks for detailed analysis.

Note 1. *For other shaft and plummer block sizes and styles consult Power Jacks Ltd.*
2. *For detailed shaft analysis and selection consult Power Jacks Ltd.*

6.2.1.1. Standard Drive Shafts

There are three standard drive shaft sizes offered by Power Jacks with ends machined to suit actuator system couplings however drive shafts can be supplied to customer sizes with specific end designs

Standard Drive Shafts	Rated Torque (Nm)	Rated Angle of Twist per Metre (Degrees)
20mm Diameter	85	4
30mm Diameter	285	2.6
40mm Diameter	675	2

Note 1. *For other drive shaft types and sizes consult Power Jacks Ltd.*
2. *For detailed analysis consult Power Jacks Ltd.*
3. *Dimensions subject to change without notice.*

6.2.1.2. Drive Shaft Critical Speed

Drive Shaft Critical Speed Factors, Fd_{cs}

$$\text{Allowable Drive Shaft Speed (rpm)} = \frac{\text{Critical Speed (rpm) for}}{\text{Unsupported Length "L" (from chart below)}} \times F_{dcs}$$

If Shaft Speed (rpm) < Drive Shaft Critical Speed (rpm) then drive shaft selection and configuration is acceptable.

DRIVE SHAFT CRITICAL SPEED GRAPH
(Shaft Whirling)

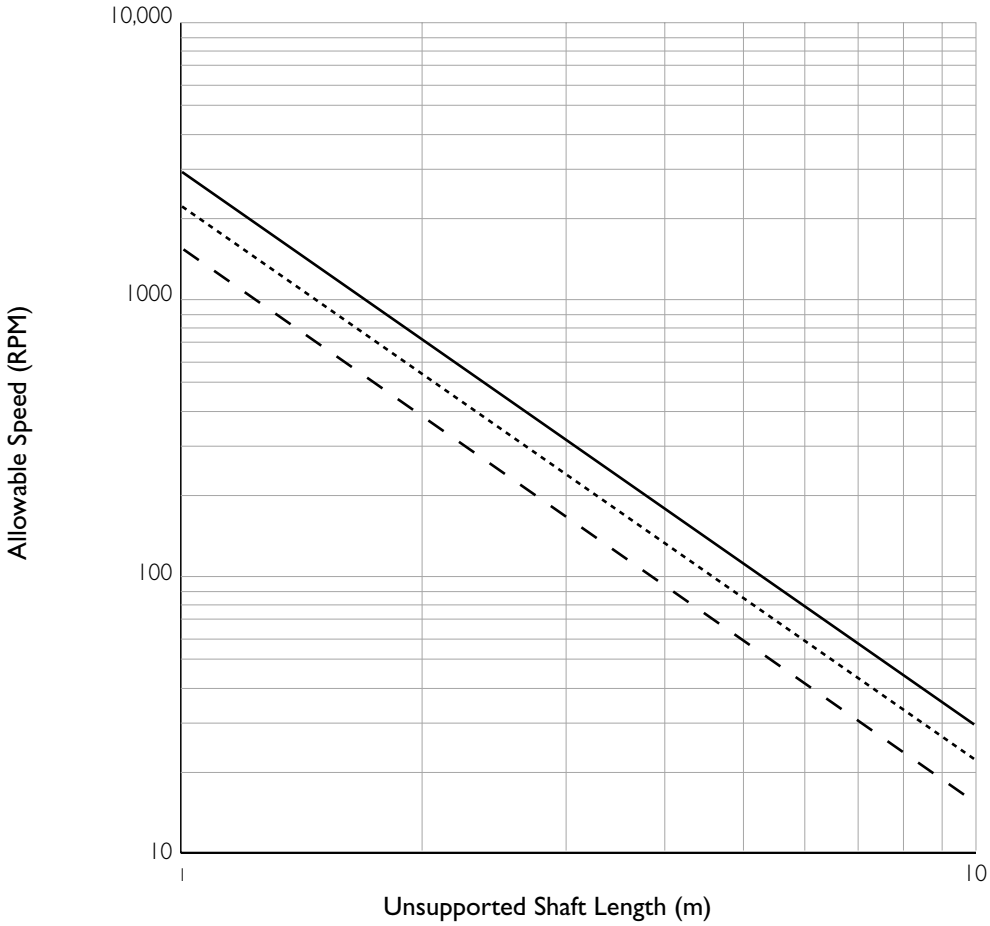

Based on simply supported both ends and 70% of the critical speed.
(The factor of safety allows for couplings and slight misalignment)

LEGEND
- - 20mm Diameter
····· 30 mm Diameter
—— 40 mm Diameter

6.2.2. Plummer Blocks

6.2.2.1. One Piece Housing Plummer Block

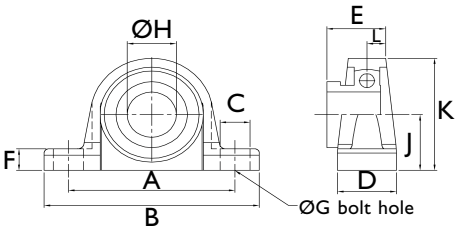

Model	A	B	C	D	E	F	G	H	J	K	L	Weight (kg)
PB1-20	96	127	20.5	32	34	14	10	20	33.33	65	10.5	0.6
PB1-30	121	152	23.5	40	39.2	17	12	30	42.9	82.5	12.5	1.1
PB1-40	136	175	24.5	48	47.7	19	12	40	49.2	99	15	1.9
PB1-50	159	203	26	54	49.7	22	16	50	57.2	115	17	2.8
PB1-60	186	240	29.5	60	60.5	26.5	16	60	69.9	138	21	4.5

Notes
1. *All dimensions in mm.*
2. *Bore diameter tolerances: (H6+H7)/2.*
3. *Material: Cast Iron housing with eccentric locking ring.*
4. *Dimensions are subject to change without notice.*
5. *For other styles and sizes of Plummer Blocks consult Power Jacks Ltd.*

6.2.2.2. Split Housing Plummer Block

Plummer blocks are to DIN736 with anti-friction bearings with tapered bores and adapter sleeve. The housings are made of cast iron and are sealed with felt strips on both sides. The housings are designed to allow floating or located bearings (bearing position set with one or two locating rings).

It is recommended when arranging drive systems only one plummer block with located bearing is used in one drive line, to avoid distortion of the drive.

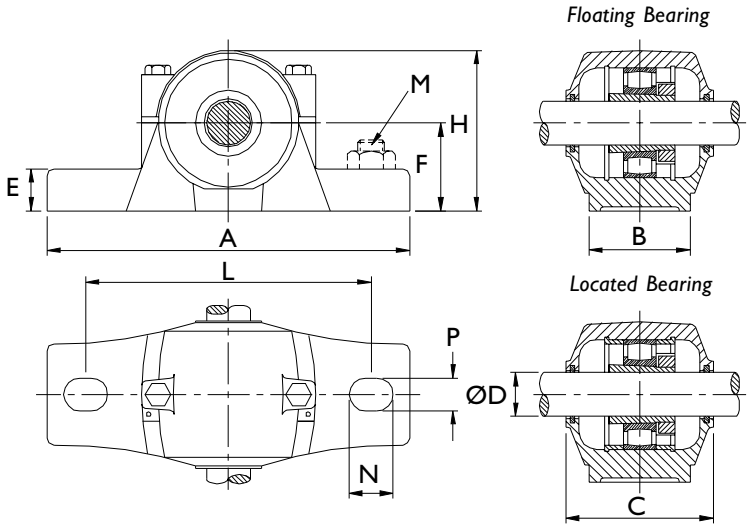

Model	ØD	A	B	C	E	F	H	L	M	N	P	Weight (kg)
PB20	20	165	46	67	19	40	72	130	M12	20	15	1.4
PB30	30	185	52	80	22	50	92	150	M12	20	15	2
PB40	40	205	60	82	25	60	109	170	M12	20	15	2.9

Note:-
1. *All dimensions in mm.*
2. *For other styles and sizes of Plummer Blocks consult Power Jacks Ltd.*
3. *Dimensions are subject to change without notice.*

6.2.3. Hand Wheels

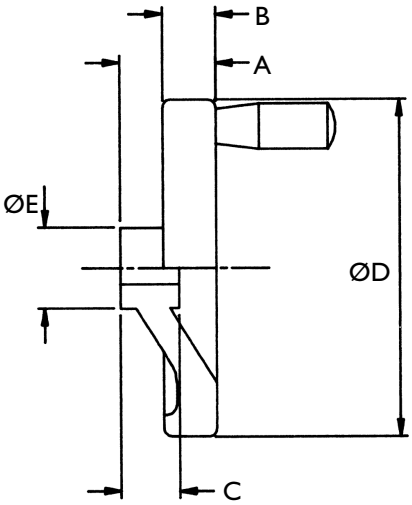

Model	A	B	C	D	E	H7 Bore
HW 005	40	14	36	98	24	10
HW 010	50	22	38	157	32	14
HW 025	56	24	43	198	40	16
HW 050	56	24	43	198	40	19
HW 100	66	30	44	247	49	25

Notes:
1. *Material: Polished aluminium casting and rotating handle.*
2. *Bored and keyed to BS4235 Part 1.*
3. *All dimensions in millimetres unless otherwise stated.*
4. *Dimensions subject to change without notice.*
5. *Other types of hand wheels are available on request. Consult Power Jacks.*

POWER JACKS
manufacturers of precision screw jacks, actuators and gearboxes Group

2, 4, 6 or 8 Pole

220 → 240 VAC / 380 → 415 VAC → 3 Phase

50/60 Hz

Foot (B3), Flange (B5) or Face (B14) mounting

IEC Frames 63 → 200 as standard

Enclosure IP54 → 55 or higher

DC or AC Type Brakes

Encoder options

Forced ventilation

Power ratings up to 30 kW as standard

7. electric **motors**

Other Motors

Power Jacks can supply Electric Motors for all applications whether AC or DC Motors including:

3-Phase AC with or without brake to EFF 1 or EFF 2

1-Phase AC capacitor start/induction run or capacitor start/capacitor run

1-Phase AC with brake

DC Permanent Magnet Motors (with or without brake)

DC Servo Motors (with or without brake and feedback devices)

Marine Motors

Hazardous Area Motors (including ATEX)

Aluminium, cast iron or steel housings

NEMA and Japanese standard Motors

Integral AC Inverter (option of local controls)

Tropicalised Motors

Contents

7.1. Electric Motors

Power Jacks can supply electric motors for all applications whether AC or DC motors are required. Detailed in this section of the Design Guide are some of the most popular motors used in industrial applications.

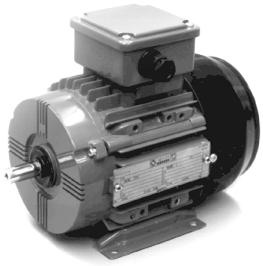

7.1.1. AC Motors

Standard Specification

- 3 Phase, 50 Hz / 60Hz.
- 220-240/380-415V up to 3kW.
- 380-415/660-720V 4 kW & above.
- B3 Foot, B5 Flange and B14 Face Mounting. (or a combination).
- 4 Pole (1500 rpm).
- 6 Pole (1000rpm).
- IEC Frame Sizes 63 → 200.
- Enclosure IP55, TEFV.
- S1 Continuous rating.

Features

- High efficiency - low running costs.
- Low noise levels.
- High power factors.
- High torque with smooth acceleration and low current.
- Multi-mount versatility for mounting arrangement and teminal box position.
- Aluminium construction for light weight and corrosion resistance.
- Four position cable entry.

Optional

- Brake motors - AC or DC units.
- 2 and 8 Pole 3 phase AC motors.
- Single phase AC motors.
- DC motors - permanent magnet or servo.
- Cast Iron or Steel construction motors.
- High altitude and high temperature options.
- Integral AC inverter.
- Integral encoder and/or Forced ventilation.
- Enclosures IP56 → IP68.
- Tropicalised motors.
- NEMA and Japanese standard units.
- Marine motors.
- Explosion proof motors.

7.1.2. AC Motor Performance Data - 1500 rpm (4 Pole)

Power		Full Load Speed (rpm)	Frame Size	FLC I_N (Amps)			Efficiency η (%)			Power Factor CosØ P_N			Full Load Torque	Direct on Line				Star Delta Y			Air Vel.	Rotor Inertia	Noise Level
														STR	SCR	POT	PUT	STR	SCR	PUT			
kW	hp	n min-1		380 V	400 V	415 V	1.0	0.75	0.5	1.0	0.75	0.5	M_N Nm	$\frac{M_A}{M_N}$	$\frac{I_A}{I_N}$	$\frac{M_K}{M_N}$	$\frac{M_S}{M_N}$	$\frac{M_A}{M_N}$	$\frac{I_A}{I_N}$	$\frac{M_S}{M_N}$	V m/s	J kgm²	L_{PA} dB(A)
0.12	0.166	1360	63S	0.50	0.47	0.47	59.0	52.0	42.0	0.62	0.53	0.40	0.85	1.9	2.75	2.0	1.65	-	-	-	5	0.0005	39
0.18	0.25	1370	63S	0.67	0.64	0.64	62.0	58.0	51.0	0.66	0.56	0.44	1.25	2.2	3.1	2.2	2.0	-	-	-	5	0.00063	39
0.25	0.33	1400	71S	0.84	0.80	0.8	69.0	68.0	62.0	0.65	0.55	0.44	1.71	1.8	4.0	2.2	1.6	-	-	-	5	0.00084	49
0.37	0.5	1410	71S	1.17	1.11	1.11	71.0	69.0	63.0	0.68	0.57	0.45	2.5	1.8	4.0	2.2	1.6	-	-	-	5	0.00087	49
0.55	0.75	1410	80M	1.66	1.58	1.58	75.0	75.0	70.0	0.67	0.57	0.45	3.7	2.0	4.2	2.4	1.8	-	-	-	7.5	0.0015	49
0.75	1.0	1410	80M	1.97	1.88	1.88	78.0	79.0	77.0	0.74	0.65	0.50	5.1	1.8	4.4	2.2	1.6	-	-	-	7.5	0.0019	49
1.1	1.5	1410	90S	2.76	2.63	2.63	79.5	80.0	78.0	0.76	0.66	0.52	7.5	2.2	5.1	2.5	2.0	-	-	-	9	0.0028	52
1.5	2.0	1420	90L	3.7	3.5	3.5	81.0	82.0	80.0	0.77	0.68	0.55	10.1	2.5	5.6	2.8	2.2	-	-	-	9	0.0035	52
2.2	3.0	1415	100L	5.0	4.8	4.8	83.5	83.5	83.0	0.80	0.74	0.61	14.8	2.2	5.5	2.5	1.9	-	-	-	10	0.008	55
3	4.0	1415	100L	6.7	6.4	6.4	84.5	85.5	85.0	0.80	0.74	0.61	20.2	2.3	5.8	2.5	2.1	-	-	-	10	0.009	55
4	5.5	1440	112M	8.7	8.3	8.3	86.5	87.0	86.0	0.80	0.74	0.60	26.5	2.5	7.0	2.9	2.1	0.75	2.2	0.65	11	0.015	56
5.5	7.5	1450	132S	11.6	11.0	11.0	88.0	88.5	88.0	0.82	0.76	0.64	36.2	2.4	7.5	2.9	2.1	0.70	2.2	0.60	12	0.027	59
7.5	10	1450	132M	15.4	14.7	14.7	89.0	89.5	89.0	0.83	0.77	0.65	49.4	2.5	7.5	2.9	2.1	0.70	2.2	0.60	12	0.029	59
11	15	1470	160M	22.0	20.9	20.9	91.5	91.5	90.5	0.83	0.78	0.67	71.5	2.5	7.7	2.9	2.0	0.65	2.3	0.50	12.5	0.068	63
15	20	1470	160L	29.4	28.0	28.0	92.0	92.5	91.5	0.84	0.79	0.68	97.5	2.5	7.7	2.9	2.0	0.65	2.3	0.50	12.5	0.084	63
18.5	25	1470	180M	37.0	35.0	35.0	92.5	92.5	91.5	0.82	0.76	0.64	120	2.8	8.4	3.2	2.2	0.80	2.6	0.65	13.5	0.17	66
22	30	1470	180L	43.0	41.0	41.0	93.0	93.0	92.0	0.84	0.80	0.69	143	2.5	7.5	2.9	2.0	0.75	2.2	0.60	13.5	0.19	66
30	40	1465	200L	58.0	55.0	53.0	92.5	92.5	91.7	0.85	0.82	0.73	196	2.8	6.7	2.6	2.25	0.75	2.1	0.50	14.5	0.40	65

STR *= Starting Torque Ratio* ***SCR*** *= Starting Current Ratio* ***PUT*** *= Pull Up Torque Ratio*

POT *= Pull Out Torque Ratio* ***V*** *= Air Velocity* ***J*** *= Rotor Interia WK²*

7.1.3. AC Motor Performance Data - 1000 rpm (6 Pole)

Power Jacks can supply electric motors for all applications whether AC or DC motors are required. Detailed in this section of the Design Guide are some of the most popular motors used in industrial applications.

Power		Full Load Speed (rpm)	Frame Size	FLC I_N (Amps)			Efficiency η (%)			Power Factor CosØ P_N			Full Load Torque	Direct on Line				Star Delta Y			Air Vel.	Rotor Inertia	Noise Level
														STR	SCR	POT	PUT	STR	SCR	PUT			
kW	hp	n min-1		380 V	400 V	415 V	1.0	0.75	0.5	1.0	0.75	0.5	M_N Nm	$\frac{M_A}{M_N}$	$\frac{I_A}{I_N}$	$\frac{M_K}{M_N}$	$\frac{M_S}{M_N}$	$\frac{M_A}{M_N}$	$\frac{I_A}{I_N}$	$\frac{M_S}{M_N}$	V m/s	J kgm²	L_{PA} dB(A)
0.07	0.094	880	63S	0.36	0.34	0.33	47.0	42.0	33.0	0.63	0.56	0.49	0.76	2.0	2.5	2.2	1.8	-	-	-	4	0.00063	40
0.09	0.125	930	71S	0.48	0.46	0.46	55.0	52.0	47.0	0.59	0.50	0.40	0.93	1.7	2.5	1.9	1.5	-	-	-	4	0.00081	55
0.12	0.166	900	71S	0.58	0.55	0.55	53.0	50.0	43.0	0.59	0.50	0.40	1.24	1.4	3.5	1.7	1.3	-	-	-	4	0.00081	55
0.18	0.25	910	71S	0.79	0.75	0.75	61.0	59.0	53.0	0.57	0.50	0.39	1.87	1.7	3.0	1.9	1.5	-	-	-	4	0.00097	55
0.25	0.33	920	71S	1.11	1.06	1.06	61.0	59.0	53.0	0.56	0.49	0.38	2.6	1.7	3.0	1.9	1.5	-	-	-	4	0.00124	55
0.37	0.5	920	80M	1.33	1.27	1.27	69.0	68.0	64.0	0.61	0.51	0.40	3.8	2.0	3.7	2.2	1.8	-	-	-	6.5	0.0015	55
0.55	0.75	920	80M	1.86	1.77	1.77	71.0	71.0	65.0	0.63	0.54	0.41	5.7	2.0	3.7	2.3	1.8	-	-	-	6.5	0.0021	55
0.75	1.0	920	90S	2.23	2.12	2.12	74.0	74.0	72.0	0.69	0.59	0.45	7.8	2.2	4.1	2.4	2.0	-	-	-	7.5	0.0028	65
1.1	1.5	940	90L	3.4	3.2	3.2	78.0	77.0	75.0	0.63	0.52	0.41	11.2	2.8	4.5	3.0	2.5	-	-	-	7.5	0.0039	65
1.5	2.0	930	100L	4.5	4.3	4.3	79.0	79.0	77.0	0.64	0.54	0.42	15.4	2.0	4.2	2.3	2.0	-	-	-	8	0.009	58
2.2	3.0	950	112M	5.8	5.5	5.5	82.5	82.5	80.5	0.70	0.60	0.47	22.1	2.8	5.8	2.8	2.3	-	-	-	9	0.014	54
3	4.0	965	132S	7.5	7.1	7.1	86.0	86.0	84.5	0.71	0.64	0.52	29.8	2.2	6.5	2.7	1.7	0.65	2.1	0.55	9.5	0.025	54
4	5.5	960	132M	9.4	9.0	9.0	86.5	86.5	86.0	0.74	0.67	0.55	39.8	2.1	6.2	2.6	1.6	0.60	2.0	0.50	9.5	0.029	54
5.5	7.5	960	132M	13.0	12.5	12.5	87.0	87.0	86.5	0.73	0.66	0.54	54.7	2.0	5.5	2.5	1.6	0.60	2.0	0.50	9.5	0.031	55
7.5	10	975	160M	17.0	16.0	16.0	90.0	90.5	89.0	0.75	0.70	0.60	73.4	1.8	6.5	2.8	1.7	0.55	2.1	0.50	10.5	0.10	59
11	15	975	160L	23.8	22.7	22.7	91.0	91.0	89.5	0.77	0.72	0.60	108	2.0	7.5	2.8	1.9	0.60	2.5	0.50	10.5	0.12	59
15	20	975	180L	32.0	31.0	31.0	91.0	91.0	89.5	0.78	0.73	0.60	147	2.4	6.5	2.8	2.2	0.65	2.2	0.60	11	0.23	59
18.5	25	975	200L	38.0	37.0	35.0	91.0	91.0	90.0	0.80	0.76	0.67	181	2.6	6.0	2.1	2.0	0.65	1.8	0.45	12	0.51	62
22	30	975	200L	45.0	43.0	42.0	91.5	91.5	90.5	0.80	0.76	0.67	215	2.6	6.0	2.1	2.0	0.65	1.8	0.45	12	0.6	62

STR *= Starting Torque Ratio* ***SCR*** *= Starting Current Ratio* ***PUT*** *= Pull Up Torque Ratio*

POT *= Pull Out Torque Ratio* ***V*** *= Air Velocity* ***J*** *= Rotor Interia WK²*

7.1.4. AC Motors with Integral Encoder

Standard AC motors are available with hollow shaft incremental encoder suitable for most advanced inverters to give a closed loop control or as a speed or position feedback indicator.

- Flexible hollow shaft design.
- Maximum speed = 6000 rpm.
- Protection class IP64, IP65 on request.
- Overall motor enclosure rating IP55 as standard.
- Operating temperature: -10°C → +70°C.
- Standard output signal: 5 VDC, RS422, quadrature, marker and compliments (A, B, N, A, B, N)
- Current consumption: 40 mA @ 5 VDC.
- Number of pulses per revolution: 0 → 8192
- Other encoder types are available on request including: 10 → 30VDC RS422 and push-pull, absolute encoders.

7.1.5. AC Motors with Forced Ventilation

The use of a specially designed, forced cooled motor, with a separately driven constant speed fan can overcome the de-rating problems associated with inverter drives. The fan units operate on a 50 Hz supply as follows;-

Frame size 63 → 80 = Single phase, 220/240 VAC Frame size 90 → 180 = Three phase 230/400 VAC

Frame Size	63	71	80	90	100	112	132	160	180
L1	309	332	384	456	487	487	562	730	787
L2	365	387	434	510	560	561	656	849	900

Note

1. *L1 = Motor with encoder and force vent unit.*
2. *L2 = Motor with brake, encoder and force vent unit.*
3. *Terminal box dimensions for force vent units are 103 x 103 mm.*

7.1.6. Motor Dimensions

7.1.6.1. B3 - Foot

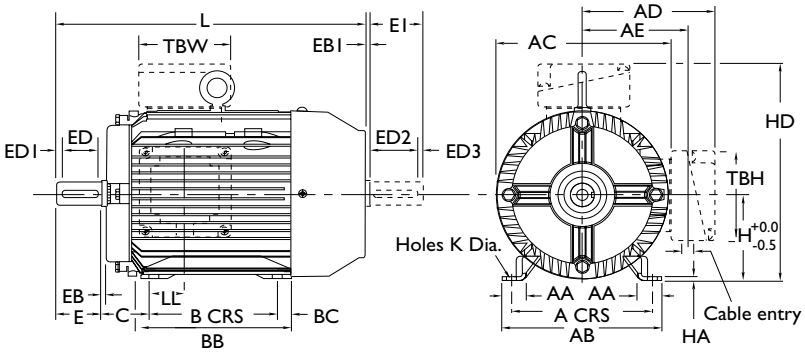

7.1.6.2. B5 or B3/B5 - Flange or Foot/Flange

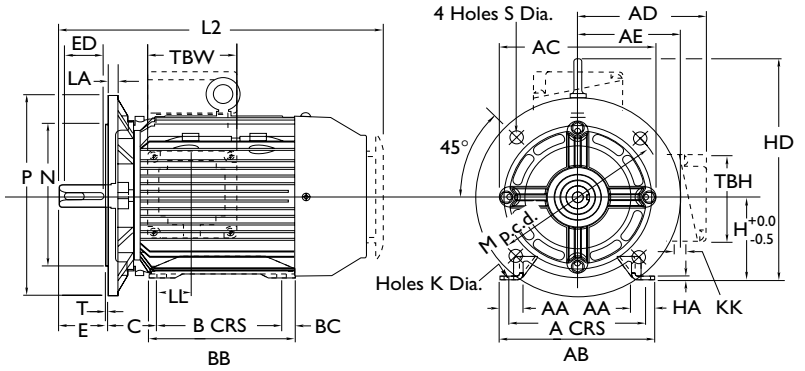

Dim N	British (BS4999) Tol. Limits		European (DIN42948) Tol. Limits	
95 & 110	h8	+0.000 - 0.054	j6	+0.013 - 0.009
130 & 180	h8	+0.000 - 0.063	j6	+0.014 - 0.011
230 & 250	h8	+0.000 - 0.072	j6	+0.016 - 0.013
300	h8	+0.000 - 0.081	j6	+0.016 - 0.016

7.1.6.3. B14 or B3/B14 - Face or Foot/Face

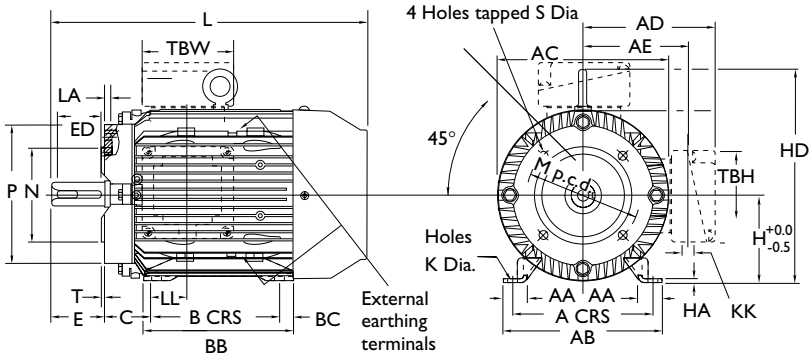

Dim N	British (BS4999) Tol. Limits		European (DIN42948) Tol. Limits	
60 & 80	h8	+0.000 - 0.048	j6	+0.012 - 0.009
95 & 110	h8	+0.000 - 0.054	j6	+0.013 - 0.009
130 & 180	h8	+0.000 - 0.063	j6	+0.014 - 0.011

Notes

1. *All dimensions in millimetres.*
2. *Drain holes are standard on frames 132-200 and on request for frames 63-112.*
3. *Cable entry can be arranged in any one of four positions at 90 intervals.*
4. *No eyebolts on frame sizes 63-100.*
5. *Dimensions TBW and TBH are for a metal terminal box. These dimensions will be reduced for plastic boxes (frames 63, 80 and 90).*
6. *Dimensions should not be used for installation purposes unless specially endorsed.*
7. *Dimensions subject to change without notice.*

7.1.6.4. Dimension Tables B3, B5, B3/B5, B14, B3/B14

Typ.	General																		Terminal Box		BS Spec	European Spec
	A	B	C	H	K	L	L2	AA	AB	BB	BC	HA	AC	AD	HD	AE	EB	LL	TBW	TBH	KK	KK
63	100	80	40	63	7	207	264	19	119	100	10	2	126	-	169	68	1.5	44	103	103	20	1 x PG 13.5
71	112	90	45	71	7	238	257	19	131	110	10	2	140	-	186	91	6.5	42	86	86	20	1 x PG 13.5
80	125	100	50	80	10	295	315	27	157	127	13.5	4	158	132	212	102	1.5	75	103	103	20	1 x PG 13.5
90SN	140	100	56	90	10	322	342	28	165	152	38.5	4	178	140	220	110	1.5	100	103	103	20	1 x PG 13.5
90LN	140	125	56	90	10	322	342	28	165	152	13.5	4	178	140	220	110	1.5	100	103	103	20	1 x PG 13.5
100L	160	140	63	100	12	368	397	28	184	170	15	4	199	154	234	123	6	32	106	106	20	2 x PG 13.5
112M	190	140	70	112	12	381	410	35	218	170	15	4	215	167	265	133	6	35	127	127	25	2 x PG 16
132S	216	140	89	132	12	451	490	38	242	208	53	5	255	188	306	155	6	25	127	127	25	2 x PG 21
132M	216	178	89	132	12	451	490	38	242	208	15	5	255	188	306	155	6	25	127	127	25	2 x PG 21
160M	254	210	108	160	15	605	644	49	304	304	69	5	314	240	363	196	6	25	140	140	32	2 x PG 29
160L	254	254	108	160	15	605	644	49	304	304	25	5	314	240	363	196	6	25	140	140	32	2 x PG 29
180M	279	241	121	180	15	667	706	50	329	329	63	6	358	260	416	216	7	40	140	140	32	2 x PG 29
180L	279	279	121	180	15	667	706	50	329	329	25	6	358	260	416	216	7	40	140	140	32	2 x PG 29
200L	318	305	133	200	M16	810	855	63	386	355	25	25	410	280	405	235	7	38.5	140	140	32	2 x PG 29 + 1 PG 13.5

Typ.	B5 Mounting						B14 Mounting					
	M	N	P	S	T	LA	M	N	P	S	T	LA
63	115	95	140	10	3	7	75	60	90	M5	2.5	7
71	130	110	160	10	3.5	7	85	70	105	M6	2.5	9
80	165	130	200	12	3.5	12	100	80	120	M6	3	9
90SN	165	130	200	12	3.5	12	115	95	140	M8	3	9
90LN	165	130	200	12	3.5	12	115	95	140	M8	3	9
100L	215	180	250	15	4	12	130	110	160	M8	3.5	12.5
112M	215	180	250	15	4	12	130	110	164	M8	3.5	13
132S	265	230	300	15	4	12	165	130	200	M10	3.5	14
132M	265	230	300	15	4	12	165	130	200	M10	3.5	14
160M	300	250	350	19	5	13	215	180	250	M12	4	13
160L	300	250	350	19	5	13	215	180	250	M12	4	13
180M	300	250	350	19	5	15	-	-	-	-	-	-
180L	300	250	350	19	5	15	-	-	-	-	-	-
200L	350	300	400	19	5	19	-	-	-	-	-	-

Typ.	Shaft DE							Typ.	Shaft Non-Drive end (When provided)							
	D	E	F	G	ED	ED1	DH		D1	E1	F1	G1	ED2	ED3	DH1	EB3
63S	11	23	4	8.5	10	16	M4 x 10	63S	11	23	4	8.5	10	16	M4 x 10	1.5
71	14	30	5	11	20	5	M5 x 12.5	71	14	30	5	11	20	5	M5 x 12.5	1.5
80	19	40	6	15.5	25	32	M6 x 16	80	19	40	6	15.5	25	32	M6 x 16	1.5
90SN	24	50	8	20	32	40	M8 x 19	90SN	24	50	8	20	32	40	M8 x 19	1.5
90LN	24	50	8	20	32	40	M8 x 19	90LN	24	50	8	20	32	40	M8 x 19	1.5
100L	28	60	8	24	50	5	M10 x 22	100L	28	60	8	24	50	5	M10 x 22	3
112M	28	60	8	24	50	5	M10 x 22	112M	28	60	8	24	50	5	M10 x 22	3
132S	38	80	10	33	70	5	M12 x 28	132S	38	80	10	33	70	5	M12 x 28	3
132M	38	80	10	33	70	5	M12 x 28	132M	38	80	10	33	70	5	M12 x 28	3
160M	42	110	12	37	100	5	M16 x 36	160M	42	110	12	37	100	5	M16 x 36	5
160L	42	110	12	37	100	5	M16 x 36	160L	42	110	12	37	100	5	M16 x 36	5
180M	48	110	14	42.5	100	5	M16 x 36	180M	48	110	14	42.5	100	5	M16 x 36	5
180L	48	110	14	42.5	100	5	M16 x 36	180L	48	110	14	42.5	100	5	M16 x 36	5
200L	55	110	16	49	100	5	M20 x 42	200L	55	110	16	49	100	5	M20 x 42	5

Shaft Dim D	British and European	
	Tol.	Limits
11 to 18	j6	+0.008 -0.003
19 to 28	j6	+0.009 -0.004
32 to 48	k6	+0.018 +0.002
55	m6	+0.030 +0.011

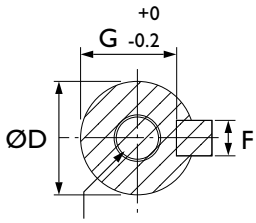

Shaft tapped DH x deep to DIN 332 Form D

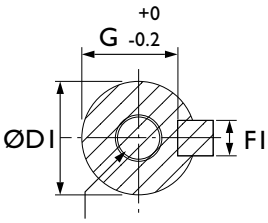

Shaft tapped DH1 x deep to DIN 332 Form D

7.1.7. AC Motors with Brakes

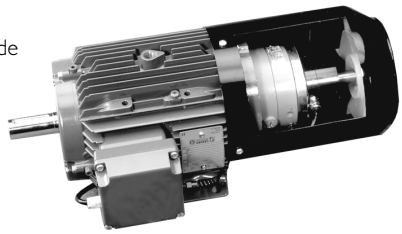

The brake units are a single disc type mounted on the non-drive end-shield of the motor and can be either DC or AC types. They are spring applied electrically released units, which provide fail to safe operating characteristics such that on interruption, or failure of power supply, the brake will engage and arrest the load.

With DC brakes, the brake coil is fed via a rectifier in the motor terminal box and is automatically switched with the AC motor supply. AC brakes are connected directly to the motor terminals. They can however be separately energised form their own AC supply, in the case of inverter drives and/or where very fast brake operation is required.

4 Pole (1500 rpm) AC Motor						
Motor			DC Brake		AC Brake	
Power (kW)	Speed (rpm)	Frame Size	Brake Size	Brake Braking Torque (Nm)	Brake Size	Brake Braking Torque (Nm)
0.12	1360	63 S	08	4	07	2
0.18	1370	63 S	08	4	07	2
0.25	1400	71 S	08	4	07	2
0.37	1410	71 S	08	4	09	5
0.55	1410	80 M	10	10	09	5
0.75	1410	80 M	10	10	09	5
1.1	1410	90 S	11	20	10	7.5
1.5	1420	90 L	11	20	11	15
2.2	1415	100 L	13	40	13	35
3	1415	100 L	13	40	13	35
4	1440	112 M	13	40	13	35
5.5	1450	132 S	16	80	13	35
7.5	1450	132 M	16	80	16	75
11	1470	160 M	19	150	19	75
15	1470	160 L	24	240	-	-
18.5	1470	180 M	24	240	-	-
22	1470	180 L	24	240	-	-
30	1465	200 L	-	-	-	-

6 Pole (1000 rpm) AC Motor						
Motor			DC Brake		AC Brake	
Power (kW)	Speed (rpm)	Frame Size	Brake Size	Brake Braking Torque (Nm)	Brake Size	Brake Braking Torque (Nm)
0.07	880	63 S	08	4	07	2
0.09	930	71 S	08	4	07	2
0.12	900	71 S	08	4	07	2
0.18	910	71 S	08	4	07	2
0.25	920	71 S	08	4	09	5
0.37	920	80 M	10	10	09	5
0.55	920	80 M	10	10	10	7.5
0.75	920	90 S	11	20	10	7.5
1.1	940	90 L	13	40	11	15
1.5	930	100 L	13	40	13	35
2.2	950	112 M	13	40	13	35
3	965	132 S	16	60	13	35
4	960	132 M	16	60	16	75
5.5	960	132 M	19	150	16	75
7.5	975	160 M	19	240	16	75
11	975	160 L	24	240	-	-
15	975	180 L	24	240	-	-
18.5	975	200 L	-	-	-	-
22	975	200 L	-	-	-	-

Note 1. *Enclosure rating is IP55 as standard, IP56 or 65 available on request.*

2. *Manual hand release handle can be fitted on request.*

3. *Larger brake motors and brakes for other motor models are available on request.*

The following brake motor lengths replace those listed in the motor dimension section.

Frame Size	63	71	80	90S/L	100L	112M	132S/M	160M/L	180M/L
Dimension "L"	306	293	367	425	454	468	543	737	809

POWER JACKS
manufacturers of precision screw jacks, actuators and gearboxes Group

Section 8.1.1. and 8.1.2. Rotary Limit Switches

RLS-51 Rotary Limit Switch

6 Models, up to 8 Limit Switches, IP66 up to 16000 revolutions
Available in 250 VAC, 24 VDC and 80 VDC
Suitable for Screw Jack and Linear Actuator mounting
Encoder, Potentiometer and Anti-Condensation Heater options

SKA Rotary Limit Switch

3-Types, 2 Switches, IP65
Up to 4380 revolutions with AC or DC switching
Switch ratings up to 600 V
Suitable for Screw Jack and Linear Actuator mounting

Section 8.2. Proximity and Contact Limit Switches

Proximity Sensors

Inductive proximity: 2-wire programmable NO/NC

Electro-Mechanical Contact Limit Switches

Compact
Safety rated

8. motion **control**

Section 8.3. Encoders: Incremental and Absolute

Incremental Encoders

Hollow/Solid shaft with 1 → 8192 lines
RS422 or Push-pull output drivers

Absolute Encoders

Multi-turn, hollow or solid shaft
SSI, 25-Bit, RS422 configurable interface
Resolution 8192 steps, 8192 revolutions

Section 8.4. - Position Indicators

Digital Position Indicator

Programmable, soft limits, relay output

Analogue Position Indicator

3-Models of transducer

Section 8.5. - Control Panels

Control Panels are available with:

AC Inverters solutions
DC Servo solutions
Safety relays
Remote operator consoles
3 Phase or 1 Phase AC power supplies

Contents

8.1. Rotary Limit Switches

8.1.1. RLS-51 Rotary Limit Switches

8.1.1.1. RLS-51 Rotary Cam Limit Switch Overview

Power Jacks products are used in a wide spectrum of industries for lifting, positioning and materials handling applications. All of which require a level of motion control.

Power Jacks RLS-51 series geared cam limit switches are ideal for use as:

- End of travel limit switches to stop or reverse an actuator system.
- Mid travel signal providers to allow integration of other process operations.

And allow integration of other feedback devices such as potentiometers and encoders inside their compact housing.

RLS-51 Features include:

1. Useable revolutions from 4 to 16000.
2. 2 to 8 position limit switches.
3. Enclosure IP66 as standard.
4. Mounting options for B14 face, B5 flange and B3 foot mounted.
5. Available in three voltages 250 VAC, 24 VDC and 80 VDC.
6. Modular design to allow a wide variety of options.
7. Operating temperature: -40°C → +80°C.

8.1.1.1.1. Illustrated Examples

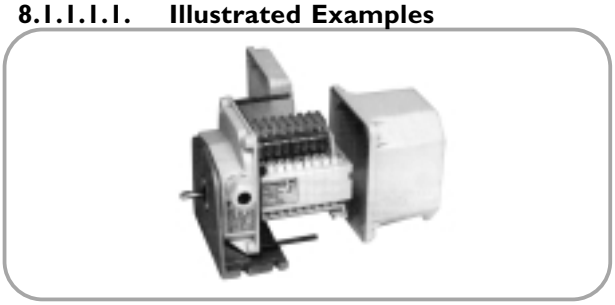

RLS-51 with 8 Limit Switches and foot mounting

With potentiometer

With pulse generator and B5 flange mount

Analogue feedback systems, e.g. potentiometers, can easily be fitted. The same applies to the pulse generator used as a motion indicator for actuator systems.

Gear Part

With motorised adjustment

The switching points for all contacts can be changed commonly by block adjustment - An electric adjusting motor can be retrofitted.

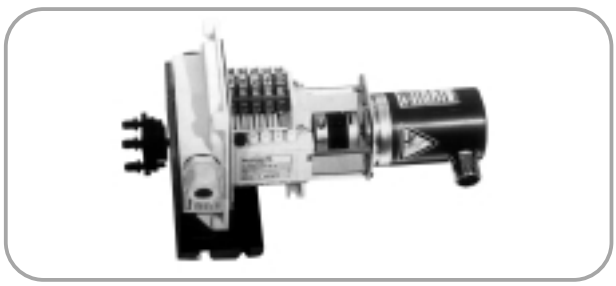

With absolute encoder

For safety disengagements positive opening switching contacts are used: for position or incremental encoders to offer highest safety and finest resolution.

8.1.1.2. RLS-51 Features and Options

The RLS-51 geared cam limit switches are universal mechanical switching devices that have been designed for use in conjunction with cam discs on a specific angle of rotation for the indication of a large number of shaft revolutions. These cam discs serve to operate mechanical contacts.

Design features include:

- Low Friction Planetary Gearing with irreversable, self-locking worm adjustment of the cam discs.
- Fixed Cam Adjustment in the housing. The adjusting worms of the cam discs are arranged so that they can be accessed from the same direction as the contact connections for optimal accessibility in confined conditions. Adjustment is possible during operation. The simplicity and accuracy of the cam adjustment is unsurpassed.
- Block Adjustment of all switching contacts jointly is made possible by a single adjusting worm (black) without the switching points of individual switching contacts being altered with respect to each other.
- Large Cam Disc Diameter for good adjustability and high switching point repeat accuracy.
- Reinforced Polycarbonate Housing as standard with IP66 protection and a wide operating temperature range.
- Modular Design allows adaptation to suit individual requirements via intermediate pieces.
- Maintenance Free gearbox components.

Options

- Position indicating plate for block adjustment.
- Potentiometer feedback drives (2 available) to suit single and multi-turn potentiometers.
- Pulse transmitter with 50 pulses per revolution.
- Anti-condensation heater to prevent condensation and excessively low temperatures in switches.
- Motor driven contact block adjuster.
- Mounting for encoders (incremental and absolute).
- Extended drive shaft for feedback devices.
- Aluminium housing for harsh environments and fitment of large and heavy encoders, IP 65 enclosure.
- Cam discs with a 40° cam angle can be provided at no extra cost. Standard is 15° cam angle. Other angles can be manufactured at extra cost on request. Note different cam angles alter the number of useable revolutions from the standard. The 40° cam has less useable revolutions than a 15° cam, consult Power Jacks.
- Stage Technology Tested Unit can be provided to VBG 70 with test certificates. A 40° angle cam disc is used for this application.

8.1.1.2.1. RLS-51 Coupling Note

The ideal drive for the limit switch is transmitted by torsionally stiff, flexible coupling with low axial and radial restoring forces. Thereby misalignment and axial displacement are balanced. For radial load rating and coupling advice consult Power Jacks.

8.1.1.3. Screw Jack (Mechanical Actuator) Mounting

The RSL-51 rotary limit switches are ideal for screw jack mounting and actuator systems in general to act as position switches. The switches can be used as over travel protection switches, operation/routine triggers, speed change signals, or other process signals.

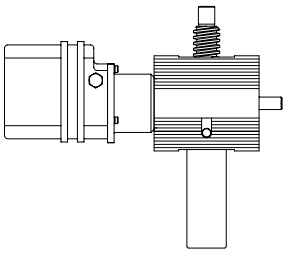

Sym-metric (cubic) Screw Jack (refer section 1.2.1.11.)

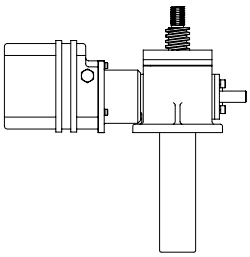

Metric Machine and Ball Screw Jack (refer section 1.2.2.13.)

For actuator (screw jack) systems refer to section 8.5.1. and/or consult Power Jacks.

8.1.1.4. RLS-51 Performance

Gear Size	Usable revs. selected	Usable revs. theoretical with 15° cam discs	Gear Ratio	Input/ output stage	No of in-term stages	1 rev. of the drive shaft - corresp. to an ang. motion of cam disc =°	Change - over contact reset rev. at driving shaft	Max drive speed (RPM)	Min drive shaft speed (only for change - over contact)
1	4.1	4.16	4.285	-	1 x 4.285	84	0.00714	1000	0.67
	6.5	6.88	7.083	1.653	1 x 4.285	50.8	0.0118	1200	1.1
	11	11.23	11.56	2.698	1 x 4.285	31.14	0.0193	1500	1.8
2	17.5	17.84	18.361	-	2 x 4.285	19.6	0.0306	1800	2.9
	29.0	29.5	30.35	1.653	2 x 4.285	11.86	0.0505	1800	4.7
	48	48.13	49.538	2.698	2 x 4.285	7.27	0.0825	1800	7.7
3	75	76.45	78.678	-	3 x 4.285	4.57	0.131	1800	12.2
	125	126.39	130.054	1.653	3 x 4.285	2.77	0.2166	1800	20.2
	205	206.26	212.272	2.698	3 x 4.285	1.69	0.3536	1800	33
4	323	327.6	337.135	-	4 x 4.285	1.06	0.5616	1800	52
	540	541.5	557.284	1.653	4 x 4.285	0.65	0.9284	1800	87
	880	883.8	909.59	2.698	4 x 4.285	0.4	1.515	1800	141
5	1384	1403.7	1444.62	-	5 x 4.285	0.25	2.406	1800	224
	2288	2320.2	2387.96	1.653	5 x 4.285	0.15	3.978	1800	371
	3735	3787.1	3897.58	2.698	5 x 4.285	0.09	6.493	1800	606
6	5900	6014.77	6190.204	-	6 x 4.285	0.06	10.313	1800	*
	9800	9942.2	10232.407	1.653	6 x 4.285	0.04	17.047	1800	*
	16000	16227.6	16701.17	2.698	6 x 4.285	0.02	27.824	1800	*

* Caution! Due to the slow actuation speed of the switching contacts caused by the high gear reductions, the change-over behaviour of the contacts is affected negatively.

From gear size 6 it is therefore recommended to use only the normally - closed contacts of the switches. Before using analogue feedback systems (e.g. potentiometer) please consult our technical department.

8.1.1.5. Switching Contacts

The contacts can either be connected through screw terminals for a cable cross section of 0.75 mm^2 to 1.5 mm^2 or through flat plugs 6.3 x 0.8 mm or through a printed card with cage tension spring terminals for a cross section of 0.14 to 2.5 mm^2. For contacts with flat-plug connection, insulated flat - plug receptables must be used at voltages above 25V AC and 60 VDC.

Contact designation	Contact type	Contact material	Switch actuation	Type of contact connection	Positive opening to VDE0660 part 200 from 7.92 EN60947T5-1	Switch Rating				Mec. life in millions of switching operations
						AC		24V DC	80V DC	
						Amps	Volts	Amps	Amps	
92	Change-over switch	Silver	Snap action	Screw terminal	Yes	6	250	6	2	10
97 ②	Change-over switch	Gold	Snap action	Screw terminal	Yes	6	250	6	2	10
99L	Change-over switch	Silver	Snap action	Printed card	Yes	6	250	3	2	10
99P	Change-over switch	Silver	Snap action	Flat plug 6.3	Yes	3	250	3	2	10
96	Normally closed contact	Silver	Snap action	Screw terminal	Yes	6	250	6	2	10

① DC switching capacity with T = 0 ms (pure resistive load) DC switching capacity with inductive load on request
② Contact 97 for SPC applications (gold contacts)

Change over switch
92
97
99L
99P

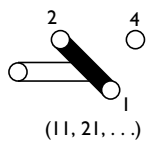

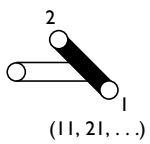

Normally closed contact
96

8.1.1.6. RLS-51 Dimensions

8.1.1.6.1. RLS-51, B14, Face Mounted

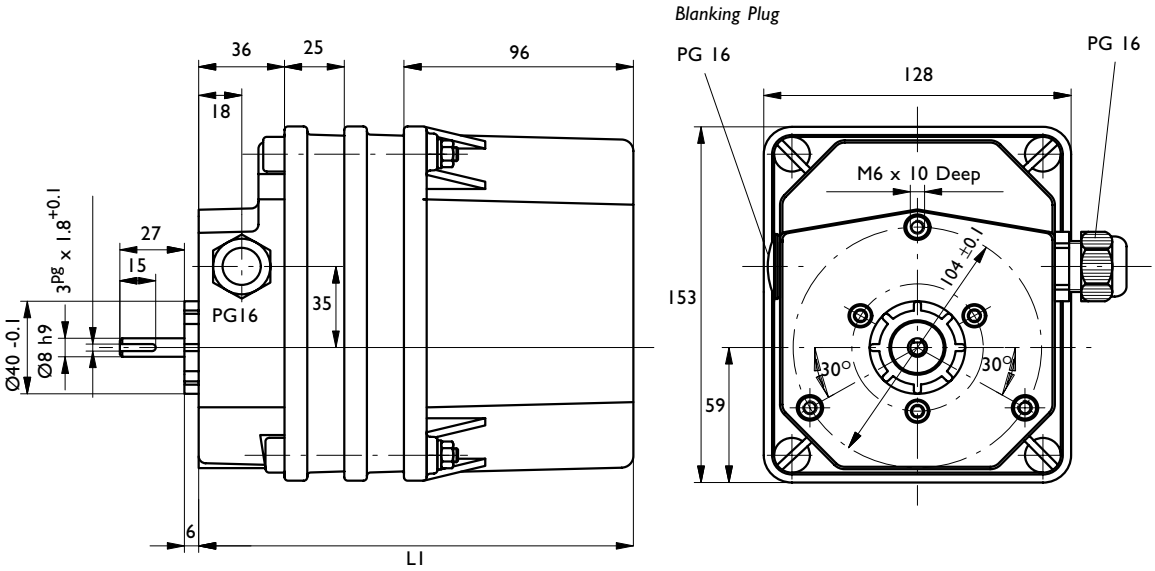

8.1.1.6.2. RSL-51, B3, Foot Mounted

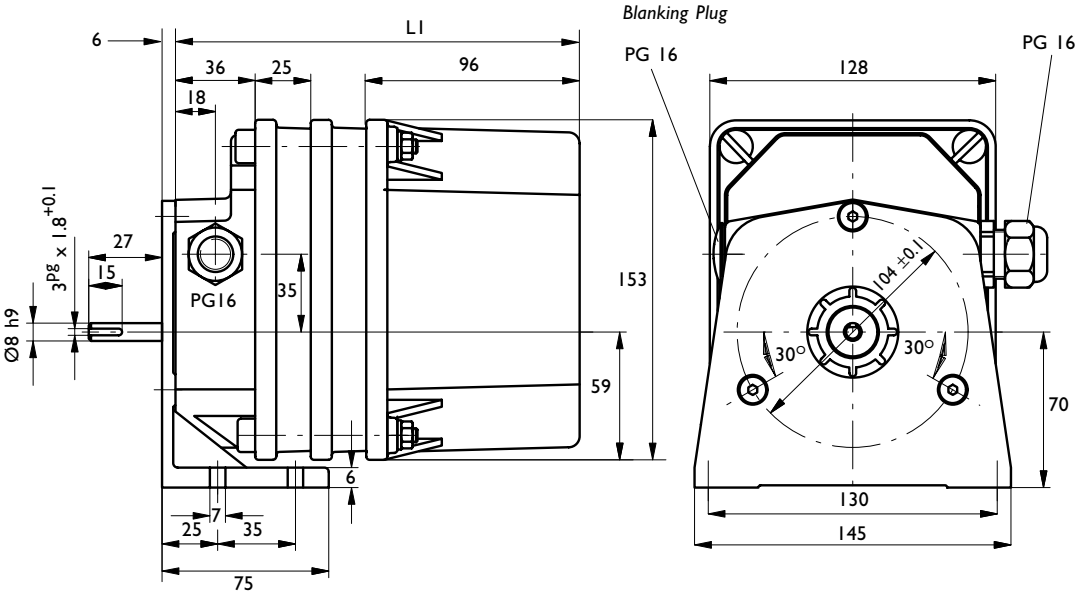

8.1.1.6.3. RLS-51, B5, Flange Mounted

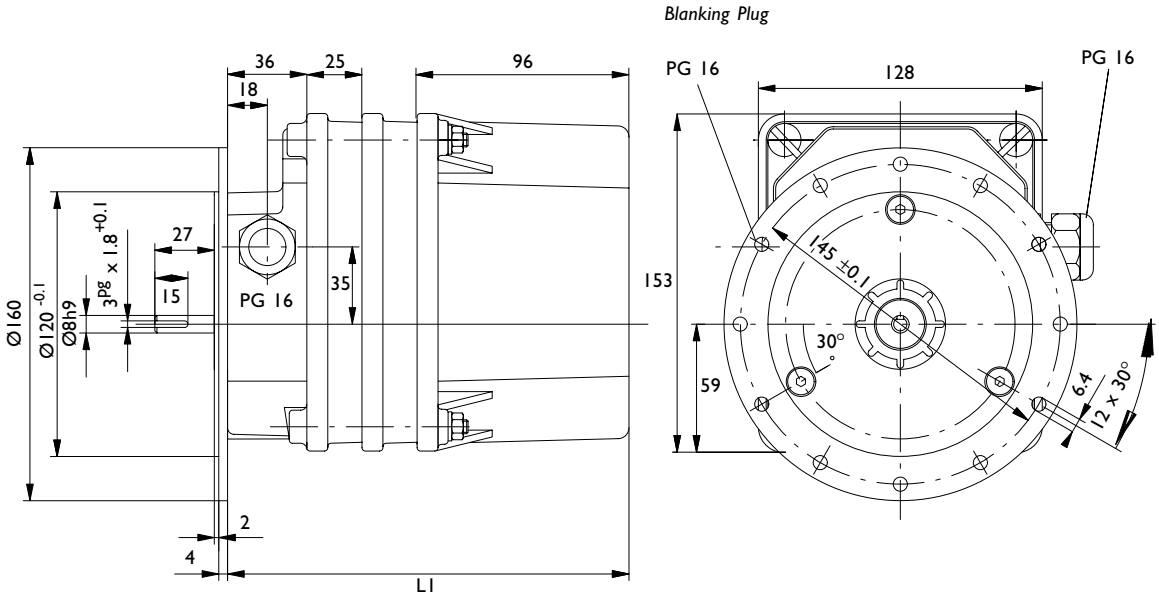

General Features:

1. Housing made of glass fibre reinforced polycarbonate with IP66 degree of protection.
2. Modular design enables optimal space utilisation. Special types available on request consult Power Jacks.
3. Overall lengths can be extended as required with 25 mm wide intermediate pieces.

8.1.1.6.4. Dimensions Size L1

Model	Gear Size	2 Contacts		4 Contacts		6 Contacts		8 Contacts	
		L1 (mm)	Number of Intermediate Pieces	L1 (mm)	Number of Intermediate Pieces	L1 (mm)	Number of Intermediate Pieces	L1 (mm)	Number of Intermediate Pieces
4.1NM 6.5NM 11NM	1	132	0	132	0	157	1	157	1
17.5BM 29BM 48BM	2	132	0	132	0	157	1	182	2
75BM 125BM 205BM	3	132	0	132	0	157	1	182	2
323BM 540BM 880BM	4	132	0	157	1	182	2	207	3
1384BM 2288BM 3735BM	5	132	0	157	1	182	2	207	3
5900BM 9800BM 16000BM	6	157	1	157	1	182	2	207	3

Note 1. *More than 8 contacts on request, consult Power Jacks.*
2. *Dimensions with more than 8 contacts and with special executions, e.g. potentiometer on request.*

8.1.2. SKA Rotary Limit Switches

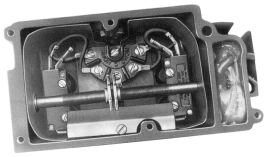

8.1.2.1. SKA Rotary Limit Switch Features

- 2 Limit Switches.
- Available in three voltage ratings - 250, 480 or 600 Volt.
- Available in three gear ratios.
- Sturdy and compact.
- Constructed of corrosion resistant materials, with housing of anodised aluminium.
- Simple to adjust. Two micro-switches, one for up/stop and one for down/stop, are activated by the adjustable limit switch nuts which travel laterally when the internal screw is rotated through gear reduction.
- Enclosure IP65 (NEMA-4).
- Lifetime lubricated.
- Operating temperature range: -29°C → +65°C (-20°F → +150°F).
- Designed especially for all Power Jacks machine screw and ball screw actuators.
- Bolts on to all Power Jacks actuators except 5kN and 10kN Metric, 1/4, 1/2 and 1 Ton Imperial and Micro-Miniature actuators were the limit switch has to be mounted separately and shaft driven.
- Optional 4-position limit switch available. Consult Power Jacks for details.

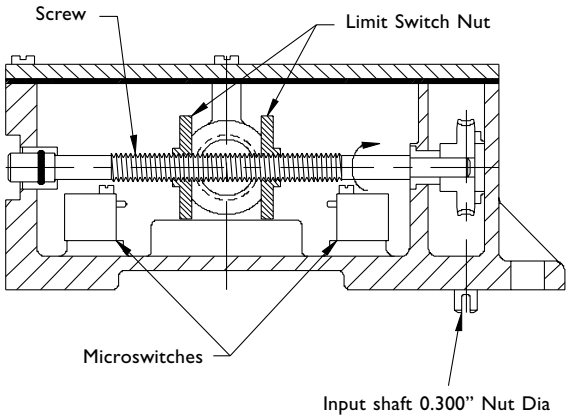

8.1.2.2. SKA Limit Switch Ratings

Limit Switch Ratings

Model No.	Max Voltage		Max Amps	
	AC	DC	AC	DC
SKA-6000-A	250	-	15	-
SKA-6000-B	480 -	125 250	15 -	0.50 0.25
SKA-6000-C	600 -	125 230	15 -	0.80 0.40

Limit Switch Worm Gear Ratios

Gear Ratios	Max Input Revolutions		
	SKA-6000-A	SKA-6000-B	SKA-6000-C
10:1	1095	750	675
20:1	2190	1500	1350
40:1	4380	3000	2700

Note *A and B models are SPDT; C model is 2-circuit, double break.*

8.1.2.3. SKA Rotary Limit Switch Dimensions

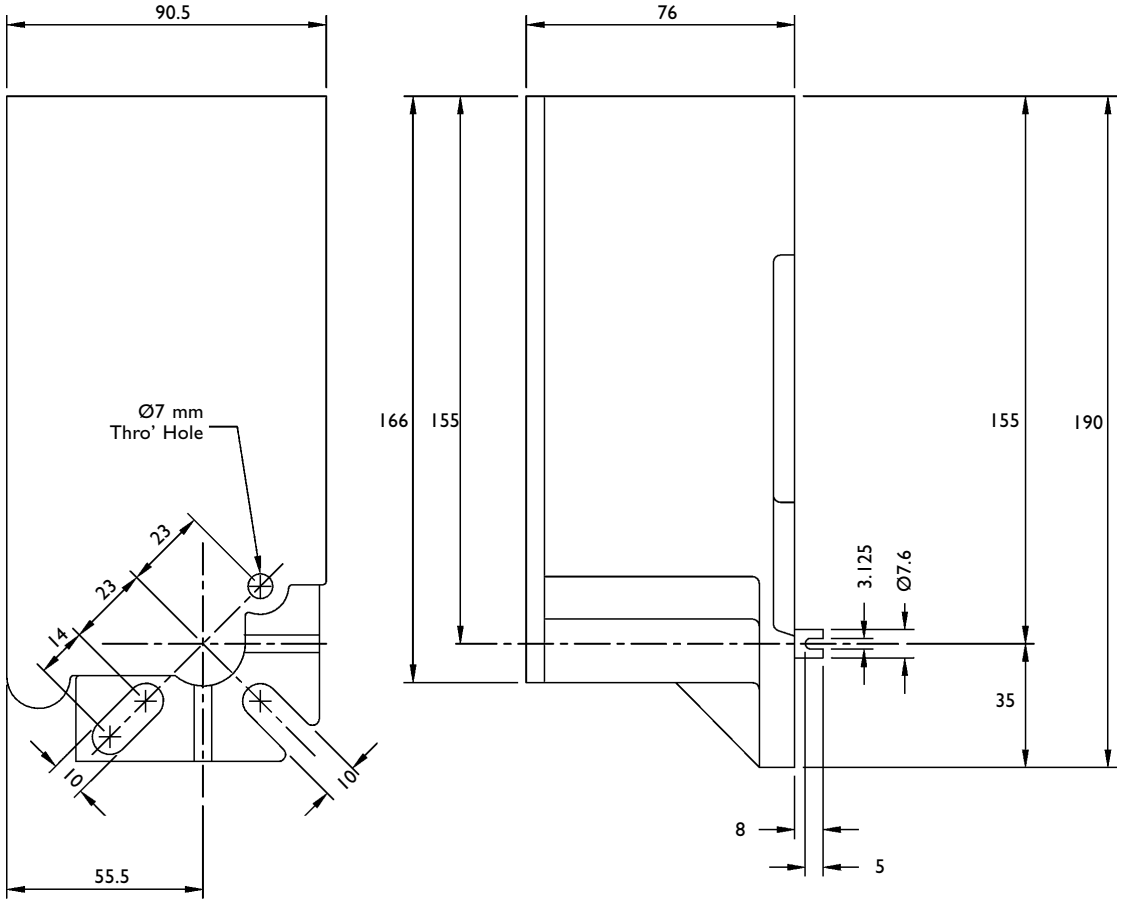

Note 1. *All dimensions in mm unless otherwise stated.*
2. *Dimensions subject to change without notice.*

8.1.2.4. SKA Limit Switch Screw Jack (Mechanical Acutator) Mounting

The SKA rotary limit switch is an ideal compact limit switch for mounting on a screw jack (mechanical actuator). The units are typically used for over travel protection. The SKA units can be installed with either "close" or "extended" mountings. Close mounting has to be done at the factory but extended mounting can be done in the field.

For full details on screw jack (mechancical actuator) mounting refer to the following options:

Metric Machine or Ball Screw Jacks - refer section 1.2.1.14.

Imperial Machine or Ball Screw Jacks - refer section 1.2.3.11.

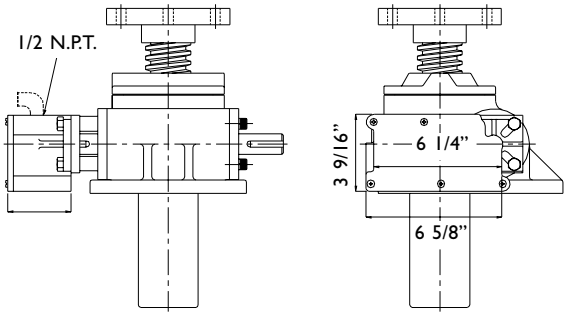

8.1.2.5. Ordering the Right SKA Limit Switch

To ensure that the limit switch has sufficient travel capability for the actuator unit, use the following formula:

$$\text{Max raise of actuator model in mm (inches} = \frac{\text{Max. Input Revolutions}}{\text{Turns of Actuator Worm per mm (inch) of Raise}}$$

Note *For water-tight connection, use a weather-tight connector and sealant around the threads.*
Limit switches will be damaged if over travelled.
For shipping purposes, the 0.5" NPT hole is closed with a plastic plug, which is not water tight.

8.1.2.5. SKA Electric Limit Switch Specifications

1. **Caution: Disconnect power before making any adjustment.**
2. Check drift before adjusting limits.
3. Remove screw "A" and nut guide keeper "B" to adjust limits.
4. Run actuator unit to desired limit.
5. Rotate appropriate nut until switch clicks, then turn 1/2 turn more.
6. Replace "A" and "B".
7. Run actuator unit to the other limit.
8. Repeat steps 2, 4 and 5 to adjust this nut.

Slight adjustments may be necessary. See chart below for notch adjustment value.

Wiring Diagram "A" & "B" Model

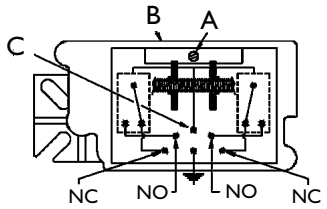

Wiring Diagram "C" Models

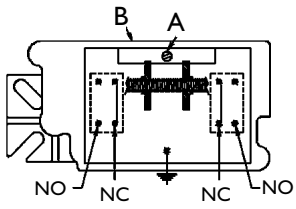

Note *NO = Normally Open* *NC = Normally Closed*

Electric Limit Switch Specifications

Model No.	Max. Voltage		Max. Amps		Max. Worm Rev.	Max. Raise	Max. Allowable Drift	Notch Adjustment
	AC	DC	AC	DC				
SKA-6000-A-10	250		15		1095	1095/TPU	24/TPU	1/TPU
SKA-6000-A-20					2190	2190/TPU	48/TPU	2/TPU
SKA-6000-A-40					4380	4380/TPU	96/TPU	4/TPU
SKA-6000-B-10	480	125 250	15	0.50 0.25	750	750/TPU	29/TPU	1/TPU
SKA-6000-B-20					1500	1500/TPU	57/TPU	2/TPU
SKA-6000-B-40					3000	3000/TPU	115/TPU	4/TPU
SKA-6000-C-10	120	115 230	15	0.80 0.40	675	675/TPU	38.5/TPU	1/TPU
SKA-6000-C-20	240				1350	1350/TPU	77/TPU	2/TPU
SKA-6000-C-40	480 800				2700	2700/TPU	154/TPU	4/TPU

TPU = Turns Per Unit of raise of actuator model, where Unit = millimetre or inches.

8.2. Proximity and Contact Limit Switches

8.2.1. Proximity Sensors

- Inductive Proximity Sensors.
- Non-contact, so no wearing parts.
- 2 Wire sensor for either Normally Closed (NC) or Normally Open (NO) switching.
- Long sensing range.
- Rugged one-piece Metal housing.
- Optical setting aid with 2 LED colour settings:-
  Red LED indicates just in sensing range.
  Yellow LED only indicates within 80% safe sensing range.
- M12 Plug in connection for fast change-ability.
- M12 sockets available straight or angled with 5 m cable.
- Full 360° visibility for switching with 4 yellow LED's at 90° offset.
- Flush face as standard, non-flush available.
- Housing plated brass, Stainless Steel available on request.
- Operating voltage 10 → 30 VDC.
- Enclosure IP67.
- Operating temperature -25°C → +70°C
- Other types available on request. Consult power Jacks.
- Ideal for screw jack or linear actuator mounting.

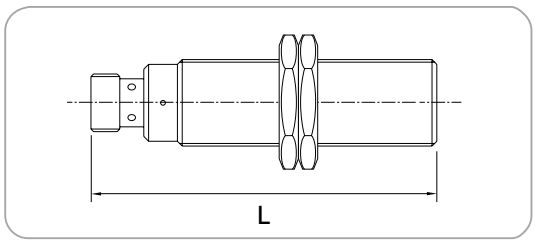

Sensor	M12	M18	M30
Sensing Range (flush)	4 mm	8 mm	15 mm
Overall Length, L	62 mm	72 mm	72 mm

Model	M12	M18	M30
Electrical Design	DC PNP/NPN		
Output	normally open/closed programmable		
Operating Voltage (V)	10 → 36 DC		
Current Rating (mA)	100		
Minimum Load Current (mA)	4		
Short-circuit Protection	Yes		
Reverse Polarity Protection	Yes		
Overload Protection	Yes		
Voltage Drop (V)	< 4.6		
Leakage Current (mA)	< 1		
Operating Distance (mm)	0 → 3.25	0 → 6.48	0 →12.1
Switch-point Drift (%/Sr)			
Hysteresis (%/Sr)	3 → 20		
Switching Frequency (Hz)	400	250	200
Correction Factors (approx.)			
Mild Steel	1	1	1
Stainless Steel	0.7	0.7	0.7
Brass	0.4	0.45	0.5
Aluminium	0.37	0.4	0.5
Copper	0.25	0.33	0.4
Function Display			
Switching Status LED	yellow (4 x 90°)		
Setting Aid LED	red		
Operating Temperature (°C)	-25 → +70		
Protection	IP 67		
EMC	EN 60947-5-2; EN 55011 class B		
Housing Material	brass; special coated; CO-PC		
Connection	M12 connector		

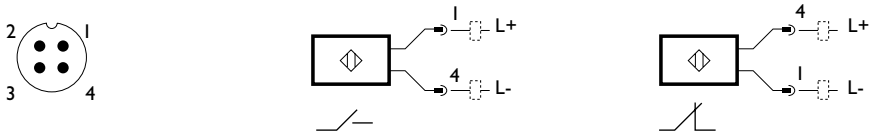

8.2.2. Compact Electro-Mechanical Contact Limit Switches

8.2.2.1. Compact Contact Limit Switch Overview

- Compact electro-mechanical limit switch.
- Study metal enclosure
- Pre-cabled unit.
- High end enclosure protection IP67.
- Available with plug-in connector.
- Other sizes and acutation heads are available on request. Consult Power Jacks.
- Ideal for scew jack or linear actuator mounting.

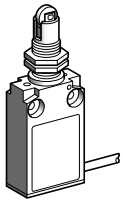

CLS-RPTL
(a)

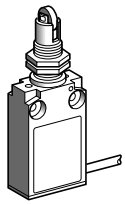

CLS-RPTT
(b)

8.2.2.2. Compact Contact Limit Switch Technical Data

Item	Description
Housing	Metal, compact hosuing, totally enclosed and sealed
Pre-cabled	2m PVC cable 5 x 0.75mm^2 (other cable lengths available on request)
Switch type	Single pole, 1 change-over, snap action
Switch actuation	Steel Roller Plunger a Lateral Cam Approach CSL-RPTL b Travers Cam Approach CSL-RPTT
Max actuation speed	0.5 m/s
Mechanical durability	10 million operating cycles
Ambient temperature Operation Storage	 -25°C → +77°C -40°C → +70°C
Product conformity	IEC947-5-1
Enclosure	IP67
Operating characteristics	AC - 15; B300 (UE = 240V, Ie = 1.5A) DC - 13; R300 (UE = 240V, Ie = 0.1A)
Insulation voltage	Ui = 300V

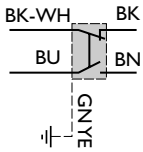

8.2.2.3. Compact Contact Limit Switch Dimensions

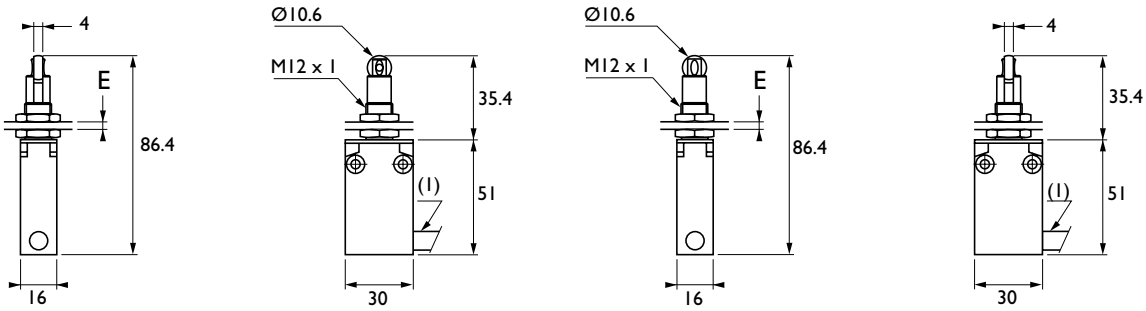

Note *1. All dimensions in mm unless otherwise stated.*
2. Dimensions subject to change without notice.
3. For dimensions of other switches consult Power Jacks.
4. For a full switch data sheet consult Power Jacks.

E = 8 mm Max, Clearance Diameter Ø12.5 mm
(1) = Ø8 mm Cable

8.2.3. Safety Related Electro-Mechanical Contact Limit Switches

8.2.3.1. Safety Related Contact Limit Switch Overview

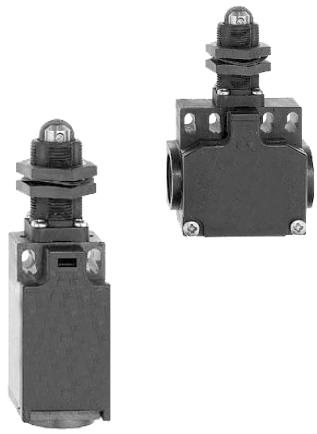

- Positive break Normally Closed contacts - will not stick or weld shut.
- Watertight design to IP67 washdown requirements.
- Rugged corrosion resistant housing tolerants hostile environments.
- Safety system approved.
- Thermoplastic enclosure. Double insulated.
- Snap action with positive-break Normally Closed contact, approved for use in safety systems.
- Wiring compartment.
- Alternative actuators heads are available on request. Consult Power Jacks.
- Actuator heads can be repositioned in steps 4 x 90°
- Good resistance to oil and petroleum spirit.
- Actuating force: Min. 9 N.
- Positive break force: 19 N.
- Actuating speed with actuating angle 30° to switch axis. Snap action: Min. 20 mm/min, max. 1 m/s.
- Cable entry: Long Body - 1 cable entry, at end. Short Body - 2 cable entries from sides.
- Ideal for screw jack or linear actuator mounting.

8.2.3.2. Safety Related Contact Limit Switch Specification

Feature	Description
Standards	IEC/EN 60947-5-1; EN 1088; BG-GS-ET-15
Design	EN 50047
Enclosure material	Glass-fibre reinforced thermoplastic, self-extinguishing
Protection class	IP 67 to IEC/EN 60529/DIN VDE 0470-1
Contact material	Silver
Contact type	Change-over with double break Zb, NC contacts with positive break
Switching system	A IEC 60947-5-1; B BG-GS-ET-15; snap action, NC contacts with positive break
Termination	Screw terminals for max. 2.5 mm^2 cables (including conductor ferrules)
Rated impulse withstand voltage U_{imp}	6 kV
Rated insulation voltage U_i	500 V
Thermal test current I_{th}	10 A
Utilisation category	AC-15; DC-13
Rated operating current/voltage I_e/U_e	4 A/230 VAC; 2.5 A/400 VAC; 1 A/500 VAC; 1 A/24 VDC
Max. fuse rating	10 A (slow blow); 16 A (quick blow), 6 A (slow blow) as positive break position switch
Ambient temperature	-30 °C → +80 °C
Mechanical life	20 million operations
Switching frequency	Max. 5,000/h
Switching point accuracy	-
Actuating speed **	Min. 10 mm/min
Contact break for complete stroke	2 x 2 mm
Bounce duration	< 3 ms
Switchover time	> 5.5 ms

*** For the switch plunger.*

Note *1. Technical Data subject to change without notice.*
2. For a full set of limit switch details consult Power Jacks.

8.2.3.3. Safety Related Contact Limit Switches Dimensions

Long Body

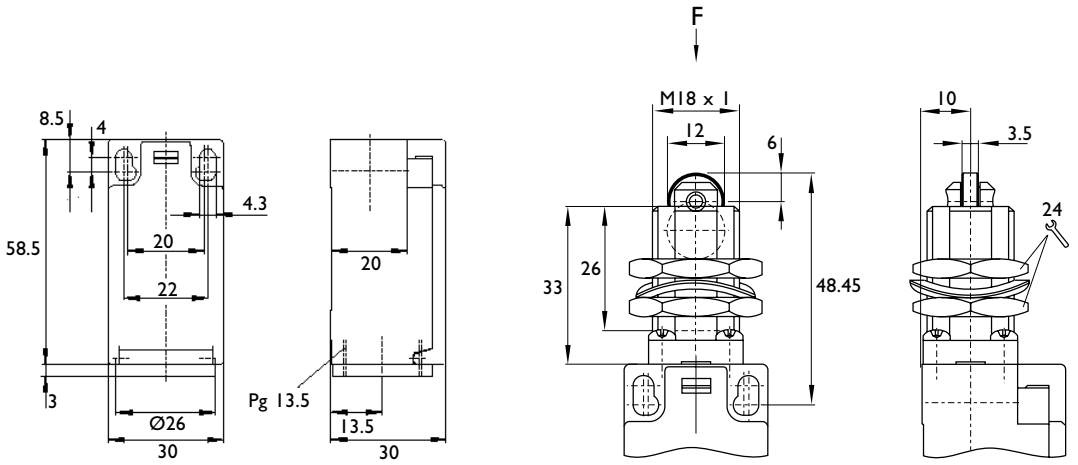

Short Body

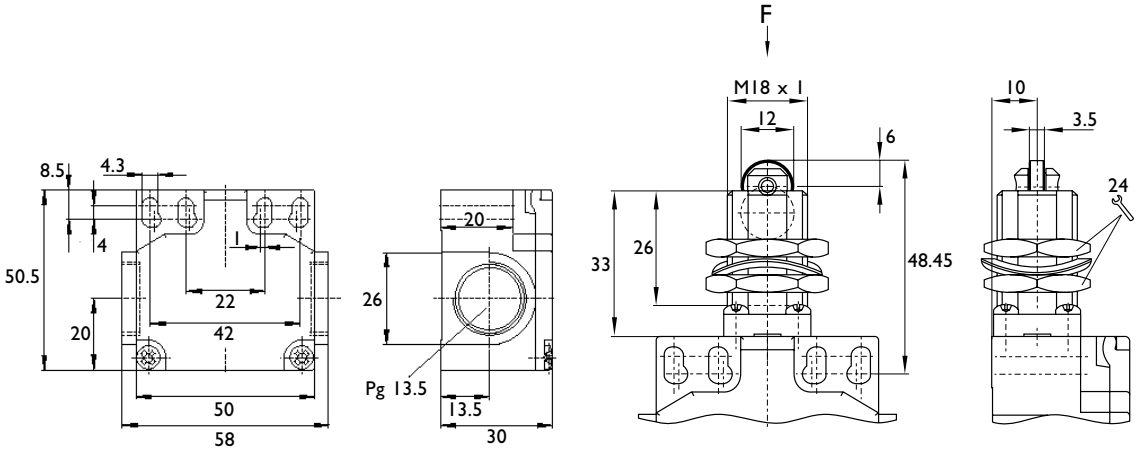

Switch Contacts/Travel

Snap Action

1 NO

1 NC

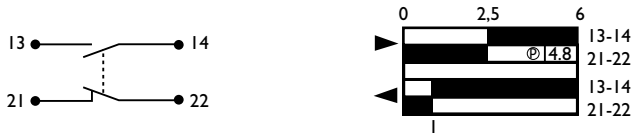

Note
1. *All dimensions in mm unless otherwise stated.*
2. *Dimensions subject to change without notice.*
3. *For dimensions of other switches consult Power Jacks.*
4. *For a full switch data sheet consult Power Jacks.*

8.3. Encoders

8.3.1. Incremental Encoders

8.3.1.1. Incremental Encoder Features

- Simple zero-pulse assignment directly on the Encoder by pressing a button.
- Long service life of the LED by using automatic light regulation.
- Maximum reliability using opto-ASICs with chip-on-board technology.
- Any number of desired lines from 1 → 8192.
- RS422 or push-pull output drivers.
- Servo flange for 6 mm solid shaft.
- Face mount flange for 10 mm solid shaft.
- Connector or cable outlet.
- High degree of protection up to IP66.
- Interchangeable collets for hollow shaft diameters from Ø6 → Ø15 mm and Ø1/4 → Ø1/2 inch.
- Screw Jack and Electro-mechanical Linear Actuator mounting kits available. Consult Power Jacks for details

8.3.1.2. Incremental Encoder Dimensions - Hollow Shaft

Standard BLIND hollow shaft sizes = 6, 8, 10, 12, 15 mm.

Standard THROUGH hollow shaft sizes = 6, 8, 10, 12 mm.

For Through hollow shaft dimensions and cable outlet dimensions consult Power Jacks.

.

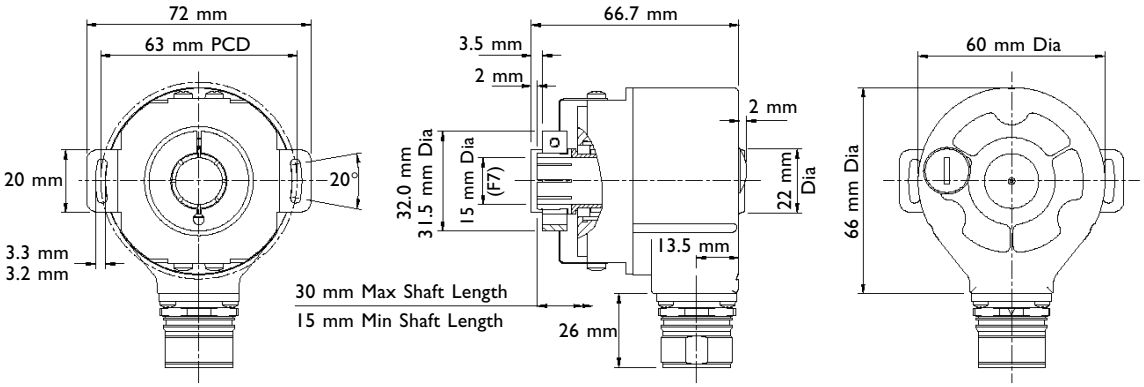

Note 1. *Dimensions in mm unless otherwise stated.*
2. *Dimensions subject to change without notice.*

8.3.1.3. Incremental Encoder Dimensions - Solid Shaft

For solid shaft encoder dimensions please consult Power Jacks.

Standard solid shaft sizes:

Flange mount = Ø10 mm

Servo flange mount = Ø6 mm

8.3.1.4. Incremental Encoder Technical Data

Feature		Description
Number of lines (Z)		1 → 8192
Output driver		RS 422 + push-pull outputs
Mass (kg)	Solid shaft and hollow shaft	approx. 0.3
Moment of inertia of the rotor (gcm^2)	Face mount with 10 mm shaft	54
	Servo flange with 6 mm shaft	48
	Through hollow shaft	see Fig. 1
	Blind hollow shaft	see Fig. 2
Measuring step (Degrees)		90/number of lines
Reference signal	Number	1
	Position	90°or 180° electrical,logically linked to K1 and K2
Error limits (Degrees)	Binary number of lines	0.035
	Non-binary number of lines	0.046
Measuring step deviation (Degrees)	Binary number of lines	0.005
	Non-binary number of lines	0.016
Max. output frequency (kHz)	RS 422	820
	Push-pull output	200
Max. angular acceleration (RAD/S^2)		5×10^5
Max. operating speed (MIN^{-1})	Face mount and servo flange with shaft seal	6000
	Face mount and servo flange without shaft seal*	10000
	Hollow shaft designs	3000
Operating torque (Ncm)	Face mount flange 10 mm shaft	typ. 0.3
	Servo flange 6 mm shaft	typ. 0.2
	Through hollow shaft	typ. 1.6
	Blind hollow shaft	typ. 0.4
Start-up torque (Ncm)	Face mount flange 10 mm shaft	typ. 0.4
	Servo flange 6 mm shaft	typ. 0.25
	Through hollow shaft	typ. 2.2
	Blind hollow shaft	typ. 0.6
Permissible shaft loading, Solid shaft (N)	Radial	20
	Axial	10
Permissible movement of the Drive element for hollow shafts (mm)	Static radial movement	±0.5
	Dynamic radial movement	±0.1
	Static/dynamic axial movement	±0.5
Bearing lifetime (Revolutions)		3.6×10^9
Working temperature range (°C)		-20 → +85
Storage temperature range (°C)		-40 → +100
Permissible relative humidity (condensation not permitted)		90%
EMC to EN 50082-2 and EN 50081-2		
Resistance to shocks (DIN IEC 68 Parts 2-27) (g/ms)		50/11
Resistance to vibration (DIN IEC 68 Parts 2-6) (g/Hz)		20/10 → 150
Protection class,		
Solid shafts	Connector outlet with mating connector fitted	IP 65
Blind hollow shafts	Cable outlet	IP 66
Through hollow shaft		IP 64
Operating voltage range		see output driver
No-load operating current	10 → 32V	typ. 100 mA
	5 V	typ. 120 mA
Operation of zero-set (only with shaft stationary)		≥100 ms
Initialisation time after power on		40 ms

* *In case, that shaft seal has been removed by customer.*

Note *1. Technical Data subject to change without notice.*

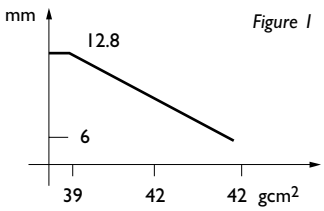

Figure 1

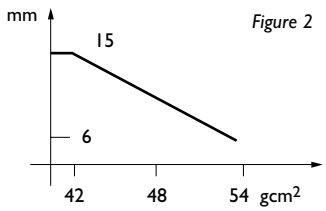

Figure 2

8.3.2. Absolute Encoders

8.3.2.1 Absolute Encoder Features

- Rugged, magnetic pick-up system.
- Rotary multiturn absolute encoder with integral gearbox, therefore **a battery is not necessary**.
- Basic resolution max. 8192 steps, 8192 revolutions.
- SSI, 25 bit (Synchronous Serial Interface).
- RS 422 configurable interface.
- Zero set push button.
- Electronically adjustable configurable interface.
- Compact dimensions.
- Highly shock-proof and vibration-proof.
- High degree of protection IP 67.
- Connector or cable outlet.
- Servo flange for 6 mm solid shaft.
- Face mount flange for 10 mm solid shaft.
- Blind hollow shaft: max. shaft diameter 15 mm. Option of using interchangeable collets, diameters from 6 to 12 mm, and 1/4 inch and 1/2 inch can be realised. Easy to install and no coupling needed.
- Screw Jack and Electro-mechanical Linear Actuator mounting kits available. Consult Power Jacks for details.

8.3.2.2. Absolute Encoder Dimensions - Hollow Shaft

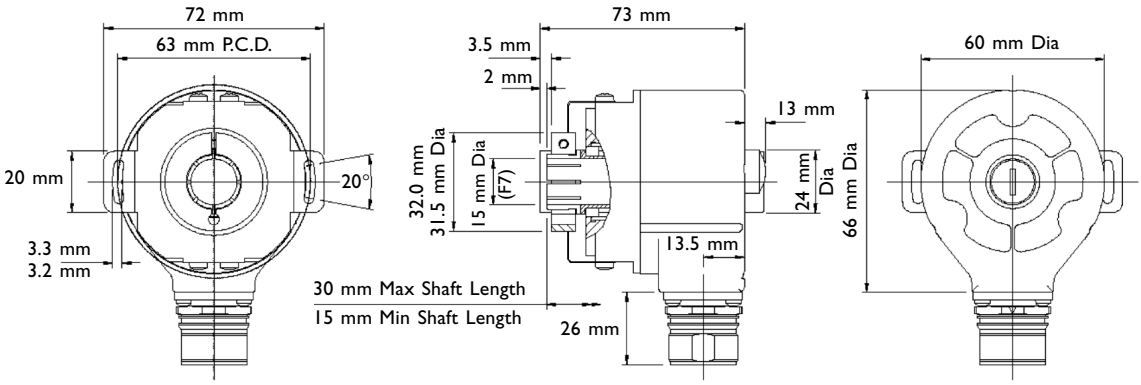

For cable outlet dimensions consult Power Jacks.

Note 1. *Dimensions in mm unless otherwise stated.*
2. *Dimensions subject to change without notice.*

8.3.2.3. Absolute Encoder Dimensions - Solid Shaft

For solid shaft encoder dimensions please consult Power Jacks.

Standard solid shaft sizes:

Flange mount = Ø10mm.

Servo flange mount = Ø6mm.

8.3.2.4. Absolute Encoder Technical Data

Feature	Description	
Shaft Type	Solid Shaft with face mount/servo flange	Blind Hollow Shaft
Communication type	SSI (Synchronous Serial Interface) 25bit	
Programmable code type	Gray / Binary	
Programmable code direction	cw/ccw	
Shaft Size (mm)	Ø6 or Ø10	Ø6 → Ø15
Number of steps per revolution	8192	
Number of revolutions	8192	
Measuring step (degrees	0.043	
Error limits (degrees)	±0.25	
Repeatability (degrees)	0.1	
Operating speed (min^{-1})	6000	3000
Position forming time (ms)	0.15	
Max. angular acceleration (rad/s^2)	5×10^5	
Moment of inertia of the rotor (gcm^2)	35	55
Operational torque with shaft sealing ring (Ncm)	1.8	0.8
Operational torque without shaft sealing ring (Ncm)	0.3	-
Start-up torque with shaft sealing ring (Ncm)	2.5	1.2
Start-up torque without shaft sealing ring (Ncm)	0.5	-
Maximum shaft loading radial/axial (N)	300/500	-
Permissible shaft movement of the drive element		
Radial static/dynamic (mm)	-	±0.3/±0.1
Axial static/dynamic (mm)	-	±0.5/±0.2
Bearing lifetime (revolutions)	3.6×10^9	
Working temperature range (°C)	-20 → +85	
Operating temperature range(°C)	-40 → +100	
Storage temperature range (°C)	-40 → +100	
Permissible relative humidity (%)	98	
Mass (kg)	0.5	0.4
EMC	EN 50081 part 2 and EN 50082 part 2	
Resistance to shocks in the mounted state (DIN IEC 68 part 2-27)	100/(6ms)	
Resistance to vibration in the mounted state (DIN IEC 68 part 2-6)	20 / (10 → 2000 H_z)	
Degree of protection according to IEC 60529		
With shaft sealing ring	IP 67	IP 67
Without shaft sealing ring and encoder flange not sealed	IP43	IP43
Without shaft sealing ring and encoder flange sealed	IP65	-
Operating voltage range (VDC)	10 → 32	
Recommended supply voltage (W)	0.8	
Initialisation time (ms)	1050 (from the moment the supply voltage is applied, this is the time which elapses before the data word can be correctly read in.)	
Signals connection	12-way connector, potential-free with respect to housing.	
Interface signals		
Clock+, Clock-, Data+, Data-	SSI max clock frequency: 1 MHz i.e. min duration of low level (clock+): 500 ns.	
SET (electronic adjustment)	»H« - active (L ≅ 0 → 4.7 V; H ≅ 10 → Us V)	
CW/CCW (step sequence in direction of rotation)	»L« - active (L ≅ 0 → 1.5 V; H ≅ 2.0 → Us V)	

Note *Technical details subject to change without notice.*

8.4. Position Indicators

8.4.1. Digital Position Indicators

8.4.1.1. Programmable Digital Position Indicator T-735

- For use in positioning applications with Power Jacks actuators.
- Displays position of lifting screws in increments of 0.01 mm or 0.001".
- Brilliant 18.5 mm high Dual colour display. Red or Green user defined e.g. Green normal operation and Red position limit reached.
- User-Friendly interface programmable from front panel via four rubber keys with help function on secondary 7 mm high display.
- Non-volatile memory retains all programmed information and count value in the event of power loss.
- Two adjustable up/down output limits (pre-sets), with a 0 → ±99999 range, can act as limit switches.
- Five digit input scaling 0.0001 → 9.9999, programmable decimal point location and lead zero blanking.
- Display convertible to metric, imperial or other units of measurement.
- For position indication on actuator applications Power Jacks recommend feedback from a shaft encoder for precise, reliable and maintenance-free operation.
- Programmable front panel functions may be locked out to prevent unauthorised adjustment.
- Reset capability allows reset to zero from front panel.

Inputs

- Count inputs - 2 channels A and B ideal for encoder connection. Capable of TTL, 30V DC max. at 10 kHz.
- Digital inputs - 2 terminals (NPN) can be used to activate pre-configured functionality e.g. remote reset and security mode.

Outputs

- 2 NPN outputs activated by each pre-set. Two red LED's on panel indicate activation.
- 2 Relay outputs (Normally Closed or Open) activated by each pre-set.
- Sensor power supply 12 VDC (unregulated), 125 mA max., ripple < 0.5V.

User Parameters

- Up/down travel limits (pre-sets).
- Calibration factor.
- Decimal position.
- Reset value -19999 → 99999 (default is zero).
- Filter speed 20, 200 or 10 kHz.
- Front panel reset enable/disable.
- Voltage/Current output definition and scaling.
- Serial communication settings.
- Display colour settings.
- Pre-set lock on/off.
- Help display on/off.
- Power supply 90 → 264 V AC 50/60 Hz or 20 → 50 V AC/DC.
- DIN housing 48 x 96 mm, mounting depth 100 mm. Panel 45 $^{+0.5}$ mm x 92$^{+0.5}$ mm, 12 mm max. thick.
- Operating temperature 0°C → +55°C. Relative humidity 20% → 90%, non-condensing.
- Protection - front panel IP66.
- CE marked and safety to DIN EN 61010 part 1.

Options

- Linear output 0/4-20mA, 0/1-5 V, 0/2-10 V, 10 bit resolution.
- RS485 Serial interface. Open ASC11, Master-slave up to 99 zones.

The position indicator can be furnished as a complete actuator positioning kit which includes digital position indicator, incremental shaft encoder with flying lead or connector and cable (variable cable length available), actuator coupling and worm shaft adapter (for installing the encoder) and mounting bracket. Electrical connections are made at the rear to the unit to terminal strips.

Example Illustration

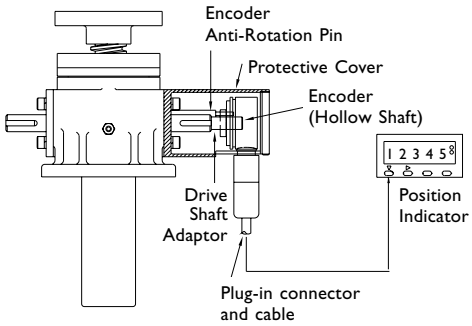

50 kN Metric Actuator

8.4.2. Analogue Postion Indicators

8.4.2.1. Transducer SKA-6200-T Remote Screw Position Indicator

The SKA-6200-T position transducer is designed to mount on the end of any SKA-6000-T limit switch. Its major component is a potentiometer which has a slider tap and a tap at each end of the element.

Gear ratios of 10:1, 20:1 and 40:1 allow for a wide range of raises. Total resistance of element is 500 ohms. Other resistance's are available on special order. Consult Power Jacks for additional information.

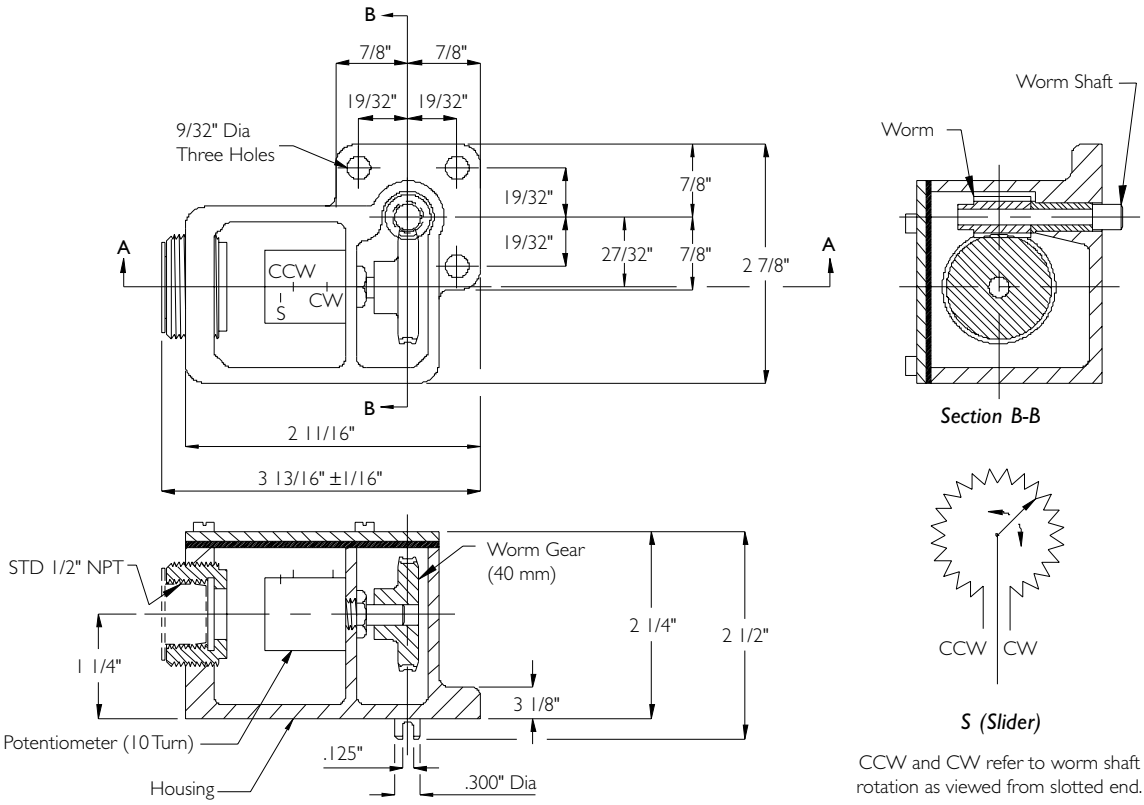

CCW and CW refer to worm shaft rotation as viewed from slotted end.

Section A-A

Power Rating: 2 W at 40°C, 0 W at 0°C, Total Resistance = 500 ohms

Note 1. Included with each position transducer are the following mounting parts:
3 socket head cap screws.
3 lock washers.
(position transducer shipped assembled in separate package to be installed at site by customer.)
2. Transducer supplied with black anodised finish as standard.

Position transducer available in following models:

Model No.	Gear Ratio	Max. Turns Transducer Worm Shaft
SKA-6200-T-10	10 :1	100
SKA-6200-T-20	20 :1	200
SKA-6200-T-40	40 :1	400

8.5. Control Panels

Power Jacks offer control systems for machine screw and ball screw actuators. These control panels provide the option of jogging (inching), or maintained operation, when specified as part of a Power Jacks linear positioning system. The control panels are built to international standards to individual customer requirements with numerous options available, consult Power jacks for details.

8.5.1. Example of Actuator Control System

Two mechanically linked Sym-metric actuator systems are electronically synchronised for speed and position control using the PowerMAX 5000 frequency converter with integral control card. The PowerMAX 5000 controls the systems by controlling the motion of each motor comparing actual and required performance via a closed feedback loop. This is provided by the encoders in each motor feeding back direct to the PowerMAX 5000. Each actuator system is referenced from a datum point signalled by the RLS-51 limit switch on each system. The RLS-51 also provides end of travel limits that are installed for safety. Each frequency converter has an integral motion control card, which are linked together and arranged in a master-slave relationship for control purposes.

This type of system is used where mechanical links to all linear motion components are not possible and where complete motion control is required for a specific process. For example a platform lift where a series of precise positions are required along the actuators stroke where the platform must stop for a specified time with variable speeds at the end of each stroke and a certain number of cycles per complete operation. All of which can be programmed into the unit with key user parameters accessible via the control keypad.

For advice on specifying the best solution for your application consult Power Jacks Ltd.

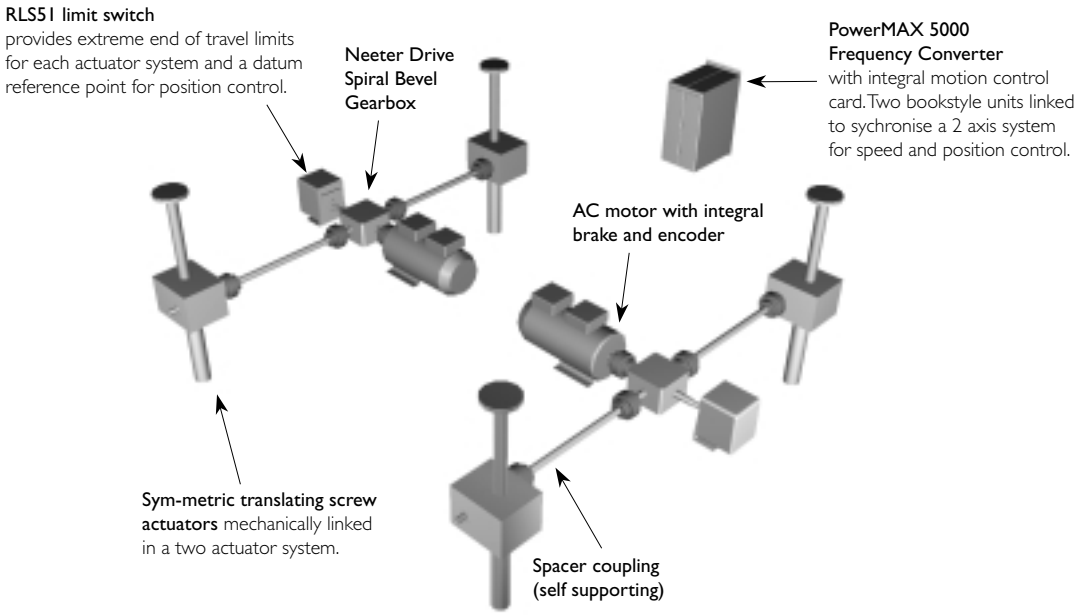

POWER JACKS
manufacturers of precision screw jacks, actuators and gearboxes
Group

9. engineers **reference**

Contents

9.1. Useful Formulae for Actuator Calculations

9.1.1. Metric Units

9.1.1.1. Lifting Screw Lead

Lifting Screw lead (mm) = Screw Pitch (mm) *Number of Starts on Lifting Screw

9.1.1.2. Calculation of the Raise Per Minute with a Given Worm Shaft Speed

When the worm shaft speed is known, the distance the load can be raised per minute can be determined with this formula:

$$\text{Raise Rate (mm/min)} = \frac{\text{RPM of Worm Shaft} * \text{Lifting Screw Lead (mm)}}{\text{Gear Ratio}}$$

or alternatively

$$\text{Raise Rate (mm/min)} = \frac{\text{RPM of Worm Shaft}}{\text{Turns of Worm for 1mm Raise}}$$

9.1.1.3. Calculation of Actuator Input Torque

$$\text{Input Torque (Nm)} = \frac{\text{Load (kN)} * \text{Lifting Screw Lead (mm)}}{2 * \pi * \text{Actuator Efficiency} * \text{Actuator Gear Ratio}}$$

or alternatively

$$\text{Input Torque (Nm)} = \frac{\text{Input Power (kW)} * 9550}{\text{Input Speed (rpm)}}$$

9.1.1.4. Calculation of Actuator Input Power

$$\text{Input Power (kW)} = \frac{\text{Load (kN)} * \text{Lifting Screw Lead (mm)} * \text{Input Speed (rpm)}}{60000 * \text{Actuator Efficiency} * \text{Actuator Gear Ratio}}$$

or alternatively

$$\text{Input Power (kW)} = \frac{\text{Load (kN)} * \text{Raise Rate (mm/min)}}{60000 * \text{Actuator Efficiency}}$$

9.1.2. Imperial Units

9.1.2.1. Lifting Screw Lead

Lifting Screw lead (inch) = Screw Pitch (inch) * Number of Starts on Lifting Screw

9.1.2.2. Calculation of the Raise Per Minute with a Given Worm Shaft Speed

When the worm shaft speed is known, the distance the load can be raised per minute can be determined with this formula:

$$\text{Raise Rate (in/min)} = \frac{\text{RPM of Worm Shaft} * \text{Lifting Screw Lead (in)}}{\text{Gear Ratio}}$$

or alternatively

$$\text{Raise Rate (in/min)} = \frac{\text{RPM of Worm Shaft}}{\text{Turns of Worm for 1" Raise}}$$

9.1.2.3. Calculation of Actuator Input Torque

$$\text{Input Torque (lbf.in)} = \frac{\text{Load (lbf)} * \text{Lifting Screw Lead (inch)}}{2 * \pi * \text{Actuator Efficiency} * \text{Actuator Gear Ratio}}$$

or alternatively

$$\text{Input Torque (lbf.in)} = \frac{\text{Input Power (HP)} * 63000}{\text{Input Speed (rpm)}}$$

9.1.2.4. Calculation of Actuator Input Power

$$\text{Input Power (HP)} = \frac{\text{Load (lbf)} * \text{Lifting Screw Lead (inch)} * \text{Input Speed (rpm)}}{3.96 \times 10^5 * \text{Actuator Efficiency} * \text{Actuator Gear Ratio}}$$

or alternatively

$$\text{Input Power (HP)} = \frac{\text{Load (lbf)} * \text{Raise Rate (inch/min)}}{3.96 \times 10^5 * \text{Actuator Efficiency}}$$

9.2. Useful Formulae for Actuator Calculations

9.2.1. Power

	Metric	Imperial
Lifting Motion	$P = \frac{m * g * v}{\eta * 1000}$	$P = \frac{w * v}{\eta * 33000}$
Linear Motion	$P = \frac{F_R * v}{1000}$	$P = \frac{F_R * v}{33000}$
	$F_R = \mu * m * g$	$F_R = \mu * W$
Rotary Motion	$P = \frac{T * n}{9550}$	$P = \frac{T * n}{63000}$

9.2.2. Torque

$T = F_R * r$	$T = T * r$
$T = \frac{P * n}{9550}$	$T = \frac{P * n}{63000}$

Symbol	Quantity	Metric Units	Imperial Units
P	Power	kW	HP
T	Torque	Nm	lbf.in
F_R	Resistance due to Friction	N	lbf
m	Mass	kg	-
W	Weight	-	lb
g	Gravitational Acceleration	9.81 ms^{-2}	32.185 ft^{-2}
v	Velocity	ms^{-1}	ft/min
η	Efficiency	decimals	decimals
μ	Coefficient of Friction	decimals	decimals
n	Rotational Speed	rpm	rpm
r	Radius	m	in

9.2.3. Moment of Inertia

	Metric	Imperial
Solid Cylinder	$J = \frac{1}{2} * m * r_{od}^2$	$WK^2 = \frac{1}{2} * W * r_{od}^2$
	$J = \frac{1}{32} * \pi * \rho * d_{od}^4$	$WK^2 = \frac{\pi}{32} * r * l * d_{od}^4$
	$J = 0.098 * \rho * l * d_{od}^4$	$WK^2 = 0.1 * \rho * l * d_{od}^4$
Hollow Cylinder	$J = \frac{1}{2} * m * (r_{od}^2 - r_{id}^2)$	$WK^2 = \frac{1}{2} * W * (r_{od}^2 - r_{id}^2)$
	$J = \frac{1}{32} * \pi * \rho * l * (d_{od}^4 - d_{id}^4)$	$WK^2 = \frac{\pi}{32} * \rho * l * (d_{od}^4 - d_{id}^4)$
	$J = 0.098 * \rho * l * (d_{od}^4 - d_{id}^4)$	$WK^2 = 0.1 * \rho * l * (d_{od}^4 - d_{id}^4)$

9.2.4. Acceleration or Braking Time

$$t_{acc} = \frac{J * n}{9.55 * T_{acc}} \qquad t_{acc} = \frac{WK^2 * n}{308 * T_{acc}}$$

Symbol	Quantity	Metric Units	Imperial Units
J	Moment of Inertia (metric)	kgm^2	-
WK^2	Moment of Inertia (imperial)	-	$lb.ft^2$
T_{acc}	Torque due to Acceleration or Braking	Nm	lbf.ft
m	Mass	kg	-
W	Weight	-	lb
r_{od}	Outer Radius	m	ft
r_{id}	Internal Radius	m	ft
d_{od}	Outer Diameter	m	ft
d_{id}	Internal Diameter	m	ft
l	Length	m	ft
ρ	Density	kg/m^3	lb/ft^3
t_{acc}	Time for Acceleration or Braking	s	s
n	Rotational Speed	rpm	rpm

9.3. Conversion Factors

Length	m	mm	inch	ft
1 m	1	1000	39.370	3.2808
1 mm	0.001	1	0.03937	3.28×10^{-3}
1 inch	0.0254	25.4	1	0.0833
1 ft	0.3048	304.8	12	1

Mass	kg	Tonne	lb	Ton (Short)	Ton
1 kg	1	0.001	2.2046	1.1023×10^{-3}	9.842×10^{-4}
1 Tonne	1000	1	2204.6	1.1023	0.9842
1 lb	0.45355937	4.536×10^{-4}	1	5×10^{-4}	4.464×10^{-4}
1 Ton (Short)	907.185	0.907185	2000	1	0.8929
1 Ton	1016.05	1.016	2240	1.120	1

Force / Weight	N	kgf	kp	lbf
1 N	1	0.1019716	0.120	0.224809
1 kgf	9.80665	1	1	2.2046
1 kp	9.80665	1	1	2.2046
1 lbf	4.44822	0.45359237	0.4536	1

Speed	m/s	mm/s	ft/s	in/s
1 m/s	1	1000	3.2808	39.37
1 mm/s	0.001	1	3.28×10^{-3}	0.03937
1 ft/s	0.3048	304.8	1	12
1 in/s	0.0254	25.4	0.0833	1

Torque / Work	Nm	kgf.cm	lbf.in	lbf.ft
1 Nm	1	10.19716	8.8507	0.73756
1 kfg.cm	9.80665×10^{-2}	1	0.8679	0.07233
1 lbf.in	0.1129848	1.1521	1	0.08333
1 lbf.ft	1.35582	13.825	12	1

9.3. Conversion Factors

Power	kW	Nm/min	kgf.m/s	hp	lbf.ft/min
1 kW	1	60000	10.20	1.34	44220
1 Nm/min	1.667×10^{-4}	1	1.699×10^{-3}	2.235×10^{-5}	0.7374
1 kgf.m/s	9.807×10^{-3}	588.6	1	0.01315	433.73
1 hp	0.7457	44741	76.04	1	33000
1 lbf.ft/min	2.261×10^{-5}	1.3566	2.3056×10^{-3}	3.03×10^{-5}	1

Inertia	kg.m^2 (mr^2)	kpms^2	lbf.ft^2 (WK^2)	lbf.in^2 (WK^2)
kg.m^2 (mr^2)	1	0.10197	23.73	3417.2
1 kpms^2	9.807	1	232.6	33488
1 lbf.ft^2 (WK^2)	0.0421	4.30×10^{-3}	1	144
1 lbf.in^2 (WK^2)	2.9264×10^{-4}	0.6192	6.944×10^{-3}	1

Stress / Pressure	MPa (N/mm^2)	N/m^2	kg/cm^2	lbf/inch^2	lbf/ft^2
1 MPa (N/mm^2)	1	1×10^{-6}	10.2	145.039	20885.6
1 N/m^2	1×10^{-6}	1	10.2×10^{-6}	145×10^{-6}	20.88×10^{-6}
1 kg/cm^2	9.807×10^{-2}	9.81×10^{3}	1	14.2233	2.05×10
1 lbf/inch^2	9.8947×10^{-3}	6.89×10^{3}	0.070307	1	144
1 lbg/ft^2	4.7879×10^{-5}	47.88026	0.488×10^{-3}	6.94×10^{-3}	1

Temperature	
T °F	(T °C x 1.8) + 32°
T °C	(T °F -32) / 1.8

9.4. Enclosure Ratings

9.4.1. IEC Ratings

1st Digit : Solid Ingress		2nd Digit : Liquid Ingress	
0	No special protection	0	No special protection
1	A large surface of the body, such as hand (but no protection against deliberate acces.) Solid objects >50 mm diameter.	1	Dripping water (vertically falling drops).
2	Fingers or similar objects not exceeding 80mm in length. Solid objects >12mm in diameter.	2	Vertically dripping water when the enclosure is tilted at any angle up to 15° from its normal position.
3	Tools, wires, etc. of diameter or thickness >2.5mm. Solid objects >1mm diameter.	3	Water falling as a spray at an angle of 60° from the vertical.
4	Wires or strips of thickness >1mm. Solid objects exceeding 1mm diameter.	4	Water splashed against the enclosure from any direction.
5	Ingress of dust is not totally prevented, but dust does not enter in sufficient quantity to interfere with satisfactory operation of the equipment.	5	Water projected by a nozzle against the enclosure.
6	No ingress of dust.	6	Water from heavy seas or projected in powerful jets.
		7	Ingress of water in a harmful quantity not possible when the enclosure is immersed under defined conditions of pressure and time.
		8	Submersible under defined conditions of pressure and time.

9.4.2. NEMA and IEC Equivalent Enclosures

Since the IEC degree of protection for enclosed equipment is defined differently from NEMA type enclosure protection, and methods of test are different, exact correlation between IEC IP-type designations and NEMA types is not possible. It is possible to make rough comparisons, which may result in certain applications. The common NEMA type designations compare with IEC designations as follows:

NEMA Type		Nearest IEC Equivalent	
NEMA 1	General protection of people from live parts. Protection against falling dirt. Test: 1/8" to 1/2" (3.175 to 12.7mm) rod entry test and rust resistance tests.	IP2X①	Protected against solid objects greater than 12mm. Test: Metallic test finger and 12mm sphere tests. No IEC rust resistance test.
NEMA 3	Dust-tight and sleet resistant. Test: Rain, dust, external icing and rust resistance test.	IP54	Dust protected. Protected against splashing water. Test: Dust and oscillating sprinkler tests. No IEC rust resistance test.
NEMA 3R	Rain-proof and sleet resitant. Test: Rod entry 1/8" to 1/4" (3.175 to 6.35mm), rain, external icing and rust resistance tests.	IP34	Protected against solid objects greater than 2.5mm. Protected against splashing water. Test: 2.5mm rod and oscillating sprinkler tests. No IEC rust resistance or icing tests.
NEMA 4	Water-tight and dust-tight. Test: Hosedown, rust-resistance and external icing tests.	IP65	Dust-tight and protected against water jets. Test: Dust and spray nozzle tests. no rust resistance or external icing test.
NEMA 4X	Water-tight, dust-tight and corrosion resistance. Test: Hosedown, corrosion resistance and external icing tests.	IPW65②	Dust-tight and protected against water jets. Test: Dust and spray nozzle tests. No rust resistance or external icing test.
NEMA 7	Hazardous gas.	-	No IEC equivalent.
NEMA 9	Hazardous dust.	-	No IEC equivalent.
NEMA 12	Dust-tight and drip-tight. Test: Drip, dust and rust resistance tests.	IP61	Dust-tight and protected against dripping water. Test: Dust and rain simulator tests. No IEC rust resistance test.
NEMA 18	Oil tight and dust tight. Test: Oil-tightness and rust-resistance tests.	IP6X①	Dust-tight. Test: Dust test. No IEC oil-tightness or rust resistance tests.

① *When only one characteristic numeral is used the second numeral is replaced by an 'X'.*

② *A 'W' inserted after the 'IP' indicates suitable for a specified weather condition (conditions and features specified by manufacturer).*

9.5. Metric Nuts and Bolts

Thread Size	Pitch	Hexagon Bolts & Nuts			Sockets Head Cap Screw		
D		A	H	K	R	T	W
M3	0.50	5.50	2.125	2.40	5.50	3.00	2.5
M4	0.70	7.00	2.925	3.20	7.00	4.00	3.0
M5	0.80	8.00	3.650	4.00	8.50	5.00	4.0
M6	1.00	10.00	4.150	5.00	10.00	6.00	5.0
M8	1.25	13.00	5.650	6.50	13.00	8.00	6.0
M10	1.50	17.00	7.180	8.00	16.00	10.00	8.0
M12	1.75	19.00	8.180	10.00	18.00	12.00	10.0
(M14)	2.00	22.00	9.180	11.00	21.00	14.00	12.0
M16	2.00	24.00	10.180	13.00	24.00	16.00	14.0
(M18)	2.50	27.00	12.215	15.00	27.00	18.00	14.0
M20	2.50	30.00	13.215	16.00	30.00	20.00	17.0
(M22)	2.50	32.00	14.215	18.00	33.00	22.00	17.0
M24	3.00	36.00	15.215	19.00	36.00	24.00	19.0
(M27)	3.00	41.00	17.215	22.00	40.00	27.00	19.0
M30	3.50	46.00	19.620	24.00	45.00	30.00	22.0
(M33)	3.50	50.00	21.260	26.00	50.00	33.00	24.0
M36	4.00	55.00	23.260	29.00	54.00	36.00	27.0
(M39)	4.00	60.00	25.260	31.00	-	-	-
M42	4.50	65.00	26.260	34.00	63.00	42.00	32.0

Hexagon Bolt

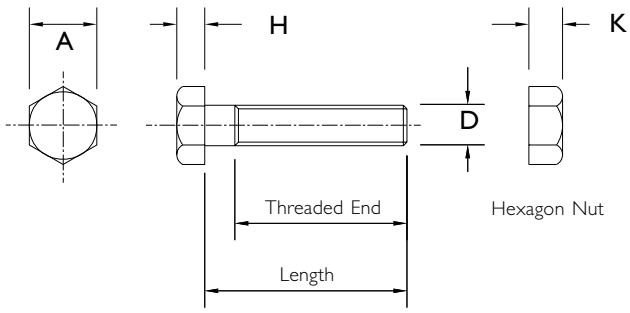

Socket Head Cap Screw

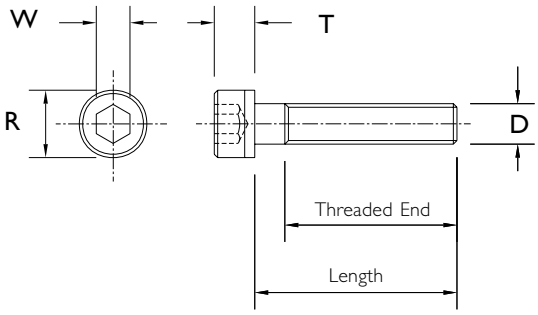

Note: 1. *All dimensions in millimetres.*
2. *Sizes in brackets are non-preferrred standards.*
3. *All dimensions are maximum sizes.*

9.6. Metric Square and Rectangular Parallel Keys

Enlarged Detail of Key and Keyways

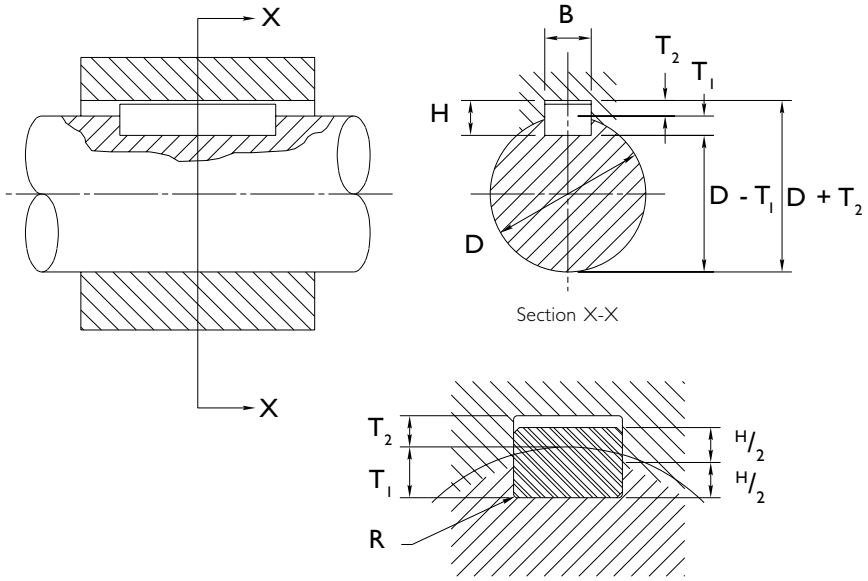

Symbol		Key	Keyway											
Nominal Diameter D		B × H width × thick-ness	Width, B						Depth				Radius, R	
			Nom	Tolerance for class of fit										
				Free		Normal		Close and Interference	Shaft, T1		Hub, T2			
Over	Incl			Shaft (H9)	Hub (D10)	Shaft (N9)	Hub (Js9)	Shaft and Hub (P9)	Nom.	Tol.	Nom.	Tol.	Max.	Min.
6	8	2 × 2	2	+0.025	+0.060	-0.004	+0.012	-0.006	1.2	+0.1	1.0	+0.1	0.16	0.08
8	10	3 × 3	3	0	+0.020	-0.029	-0.012	-0.031	1.8	0	1.4	0		
10	12	4 × 4	4	+0.030	+0.078	0	+0.015	-0.012	2.5		1.8			
12	17	5 × 5	5	0	+0.080	-0.030	-0.015	-0.042	3.0		2.3		0.25	0.16
17	22	6 × 6	6						3.5		2.8			
22	30	8 × 7	8	+0.036	+0.095	0	+0.018	-0.015	4.0	+0.2	3.3	+0.2		
30	38	10 × 8	10	0	+0.040	-0.036	-0.018	-0.051	5.0	0	3.3	0	0.40	0.25
38	44	12 × 8	12						5.0		3.3			
44	50	14 × 9	14	+0.043	+0.120	0	+0.021	-0.018	5.5		3.8			
50	58	16 × 10	16	0	+0.050	-0.043	-0.021	-0.061	6.0		4.3			
58	65	18 × 11	18						7.0		4.4			
65	75	20 × 12	20						7.5		4.9		0.60	0.40
75	85	22 × 14	22	+0.052	+0.149	0	+0.026	-0.022	9.0		5.4			
85	95	25 × 14	25	0	+0.065	-0.052	-0.026	-0.074	9.0		5.4			
95	110	28 × 16	28						10.0		6.4			
110	130	32 × 18	32						11.0		7.4			
130	150	36 × 20	36	+0.062	+0.180	0	+0.031	-0.022	12.0	+0.3	8.4	+0.3	1.00	0.70
150	170	40 × 22	40	0	+0.080	-0.062	-0.031	-0.088	13.0	0	9.4	0		
170	200	45 × 25	45						13.0		10.4			

Note: *For full range and further informtion refer BS 4235: Pt 1: 1972*

9.7. Physical Property Values, at 20°C

Material	Carbon Steel	Aluminium Alloys	Brass 65/35	Copper	Stainless Steel
Density, ρ (kg/m^3)	7860	2710	8450	8910	7750
Young's Modulus, E (GN/m^2)	207	710	105	119	190
Shear Modulus, G (GN/m^2)	79.3	26.2	38	44.7	73.1
Bulk Modulus, K (GN/m^2)	172	57.5	115	130	178
Poisson's Ratio, ν	0.292	0.334	0.35	0.326	0.305
Coefficient of Thermal Expansion x 10^{-6}/K	12	22	19	17	14
Specific Heat J/kg K	460	920	420	420	460

Note: *Values given are representative. Exact values may vary with composition and processing, sometimes greatly.*

9.8. Standard SI Prefixes * †

Name	Symbol	Factor
exa	E	1 000 000 000 000 000 000 = 10^{18}
peta	P	1 000 000 000 000 000 = 10^{15}
tera	T	1 000 000 000 000 = 10^{12}
giga	G	1 000 000 000 = 10^{9}
mega	M	1 000 000 = 10^{6}
kilo	k	1 000 = 10^{3}
hecto ‡	h	100 = 10^{2}
deca ‡	da	10 = 10^{1}
deci ‡	d	0.1 = 10^{-1}
centi ‡	c	0.01 = 10^{-2}
milli	m	0.001 = 10^{-3}
micro	μ	0.000 001 = 10^{-6}
nano	n	0.000 000 001 = 10^{-9}
pico	p	0.000 000 000 001 = 10^{-12}
femto	f	0.000 000 000 000 001 = 10^{-15}
atto	a	0.000 000 000 000 000 001 = 10^{-18}

* If possible use multiple and submultiple prefixes in steps of 1000.

† Spaces are used in SI instead of commas to group numbers to avoid confusion with the practise in some European countries of using commas for decimal points.

‡ Not recommened but sometimes encountered.

9.9. Limitation of Responsibility

The ratings given in this catalogue were compiled using standard engineering procedures. The ratings are designed to guide the customer in the selection of a unit. We do not guarantee the ratings in specific applications. Prototype testing of every application is recommended before production. Our engineering facilities are available for consultation at all times. Please ask us for assistance with linear motion and drive application problems. This catalogue is designed to assist in the selection of a suitable linear motion or power transmission product for economical, long and trouble free service.

Due to Power Jacks policy of continuous improvement designs may be subject to change without notice. Please ask for certified drawings.

9.10. Warranty

Subject to the condition stated herein. Power Jacks will repair or replace, without charge, any parts proven to Power Jacks satisfaction to have been defective in material or workmanship. Claims must be made within one year after date of shipment. Power Jacks will not repair or replace any parts that become inoperative because of improper maintenance, eccentric loading, overloading, chemical or abrasive action, excessive heat, or other abuse. Equipment and accessories not of Power Jacks manufacture are warranted only to the extent that they are warranted by the manufacturer, and only if the claimed defect arose during normal use, application and service. Equipment, which has been altered or modified by anyone without Power Jacks authorisation, is not warranted by Power Jacks. EXCEPT AS STATED HEREIN, POWER JACKS MAKES NO OTHER WARRANTIES, EXPRESS OR IMPLIED INCLUDING WARRANTIES OF MERCHANTABILITY AND FITNESS FOR A PARTICULAR PURPOSE.

WARNING: The equipment shown in this catalogue is intended for industrial use only and should not be used to lift, support, or otherwise transport people unless you have a written statement from Power Jacks Limited which authorises the specific unit as used in your application suitable for moving people.

www.powerjacks.com

Power **Jacks** Limited

Main Sales Office and Production
South Harbour Road
Fraserburgh AB43 9BZ
Scotland UK

t +44 (0) 1346 513131
f +44 (0) 1346 516827
e sales@powerjacks.com

power jacks **worldwide**

distributed by:

screw jacks • linear actuators • screw drives • bevel gearboxes • reduction gearboxes • couplings & drive shafts • electric motors • motion control